Am. J. Hum. Genet. 51:1071–1077, 1992

The Presence of Two Different Infantile Tay-Sachs Disease Mutations in a Cajun Population

Geraldine A. McDowell,* Emilie H. Mules,† Philip Fabacher,‡ Emmanuel Shapira,§ and Miriam G. Blitzer*

*Division of Human Genetics, Department of Pediatrics, and Department of Obstetrics and Gynecology, University of Maryland School of Medicine, and †Genetics Laboratory, Kennedy Krieger Institute, Baltimore; ‡Office of Public Health, Maternal Child Section, Shreveport, LA; and §Hayward Genetics Center, Tulane University School of Medicine, New Orleans

Summary

A study was undertaken to characterize the mutation(s) responsible for Tay-Sachs disease (TSD) in a Cajun population in southwest Louisiana and to identify the origins of these mutations. Eleven of 12 infantile TSD alleles examined in six families had the β-hexosaminidase A (Hex A) α-subunit exon 11 insertion mutation that is present in approximately 70% of Ashkenazi Jewish TSD heterozygotes. The mutation in the remaining allele was a single-base transition in the donor splice site of the α-subunit intron 9. To determine the origins of these two mutations in the Cajun population, the TSD carrier status was enzymatically determined for 90 members of four of the six families, and extensive pedigrees were constructed for all carriers. A single ancestral couple from France was found to be common to most of the carriers of the exon 11 insertion. Pedigree data suggest that this mutation has been in the Cajun population since its founding over 2 centuries ago and that it may be widely distributed within the population. In contrast, the intron 9 mutation apparently was introduced within the last century and probably is limited to a few Louisiana families.

Introduction

Infantile Tay-Sachs disease (TSD) is a lethal autosomal recessive lysosomal storage disorder caused by mutations in the α-subunit of the enzyme β-hexosaminidase A (Hex A) (Okada and O'Brien 1969). While the TSD carrier frequency is approximately 1 in 167 in the general population, it is markedly increased in a few groups, most notably, the Ashkenazi Jews and non-Jewish French Canadians from southeastern Quebec (Andermann et al. 1977; Peterson et al. 1983). Within 3 decades, eight infants from six Cajun families in southwest Louisiana have been diagnosed with TSD. Of these, four apparently unrelated affected infants were born in the last 10 years. Although the carrier frequency of TSD in the Cajun population of Louisiana is unknown, the occurrence of so many affected infants in a population of less than 1 million (Rushton 1979, p. 3; Smith 1990) suggests that it may be increased over that in the general population. The Cajun community of southwest Louisiana was founded in the 18th century, primarily by French Acadians expelled from the Canadian colony of Acadia, located in present-day Nova Scotia and Prince Edward Island (Rushton 1979, pp. 23–57). In addition, Spanish settlers, French militia who moved to Louisiana from Alabama in 1763, and Germans who emigrated from the Palatinate, Alsace, Lorraine, and Switzerland also contributed to this region's population (Deiler 1909; Vidrine 1985). The original Cajun communities had relatively high rates of consanguinity and remained isolated, to a large degree, until the 19th century (Thurmond and DeFraites 1974).

We report the presence of two different infantile TSD mutations in six families from southwest Louisiana. The presence of more than one mutation for this rare disorder in a geographically isolated population

Received February 12, 1992; revision received June 16, 1992.
Address for correspondence and reprints: Miriam G. Blitzer, Ph.D., Division of Human Genetics, 655 West Baltimore Street, BRB 11-037, University of Maryland School of Medicine, Baltimore, MD 21201.
© 1992 by The American Society of Human Genetics. All rights reserved.
0002-9297/92/5105-0016$02.00

was unexpected. Extensive pedigree data were analyzed to determine both how long these mutations have been in the Cajun population and their geographic origins. The implications for health care within this community are discussed.

Material and Methods

Characterization of the TSD Mutations

PCR and DNA sequencing.—Five classical TSD probands were identified by enzyme analysis in the Cajun population, within the last 20 years. Genomic DNA from the probands was isolated from fibroblasts by standard methods (Sambrook et al. 1989). DNA also was extracted from the peripheral blood of the parents (obligate heterozygotes) of three siblings presumed, on the basis of clinical presentation, to have TSD in the 1960s. (No biochemical data were available for these siblings.) Exon 9 and flanking intron sequences of the Hex A α-subunit were amplified by PCR (5′-CAGGCATTAGGCTTTCAGGA-3′ and 5′-GGCCTGACTCGGTATGGAAA-3′), as were exon 11 and flanking intron sequences (5′-ACTGCCATTTGACCTTTTTA-3′ and 5′-CCATCCTGTGGCCCAACCCA-3′), by using Amplitaq DNA polymerase under conditions specified by the manufacturer (Perkin Elmer Cetus). PCR products were sequenced directly by the dideoxy chain termination method of Sanger et al. (1977).

Determination of exon 11 heterozygotes by heteroduplex formation.—Heterozygosity for the exon 11 insertion mutation was determined by evaluation of heteroduplex formation of exon 11 PCR products (Shore and Myerowitz 1990). The Hex A α-subunit exon 11 was amplified from genomic DNA according to the method described above, was fractionated on a 3% agarose minigel, and was stained with ethidium bromide. DNA was visualized with UV light.

Restriction-enzyme analysis of intron 9 donor splice site mutation.—The G→A transition at position +1 of intron 9 creates a new *Nla*III site. As no other *Nla*III site occurs in the exon 9 PCR product, *Nla*III digestion of a normal exon 9 sequence does not change the size of the 221-bp PCR product observed on a 2% Nusieve/1% agarose minigel, when stained with ethidium bromide. Presence of the mutation allows the enzyme to cut the PCR product into two fragments of 144 bp and 77 bp. A heterozygote for this mutation would show three bands: the larger, 221-bp band representing the allele that is normal in the exon 9 region and the two smaller bands representing the allele with the intron 9 mutation.

Genealogical Evaluation of TSD Heterozygotes

Identification of TSD heterozygotes.—To determine TSD carrier status, Hex A activity was assayed, in serum or leukocytes, for 90 relatives in families 3–6 by a modification of the heat inactivation assay described by Kaback (1973) and Shapira et al. (1989, pp. 30–33). DNA extracts from all study participants also were analyzed by heteroduplex analysis for heterozygosity of the exon 11 insertion mutation.

Collection of pedigree data.—Pedigrees were constructed for the 12 obligate TSD heterozygotes from six apparently unrelated Cajun families. Pedigrees were elicited through personal interviews with family members. The pedigrees of eight obligate heterozygotes, seven having the exon 11 insertion and one having the intron 9 mutation, were expanded through searches of church and civil records of Louisiana, historical accounts, and published family histories (Deiler 1909; Tanguay 1969; Hebert 1974, 1978; Catholic Diocese of Baton Rouge 1978; Jehn 1980; Conrad 1981; Robichaux 1981; Sandefur and Whittington 1982; Vidrine 1985).

Results

Characterization of TSD Alleles

Eleven of the 12 TSD alleles from six different Cajun families were found to carry a 4-bp insertion in exon 11. Direct sequencing of PCR-amplified Hex A α-subunit exon 11 indicated that the probands in families 1–4 were homozygous for the sequence TATC inserted at nucleotide position 1278 (fig. 1, *top*). This insertion is a repeat of the four nucleotides preceding it and is the most common infantile TSD mutation in the Ashkenazi Jewish population. Although DNA from the affected members of family 6 was not available, heteroduplex analysis revealed that the parents (obligate heterozygotes) carried the exon 11 insertion (fig. 1, *left*).

The proband in family 5 was found to be a compound heterozygote, having one allele with the normal exon 11 sequence and one allele that has the four-base insertion (fig. 1, *top*). Heteroduplex analysis of exon 11 PCR products indicated that her paternal relatives were carriers of the insertion mutation. DNA sequence analysis of exon 9 and flanking intron sequences from the proband of family 5 revealed that the remaining

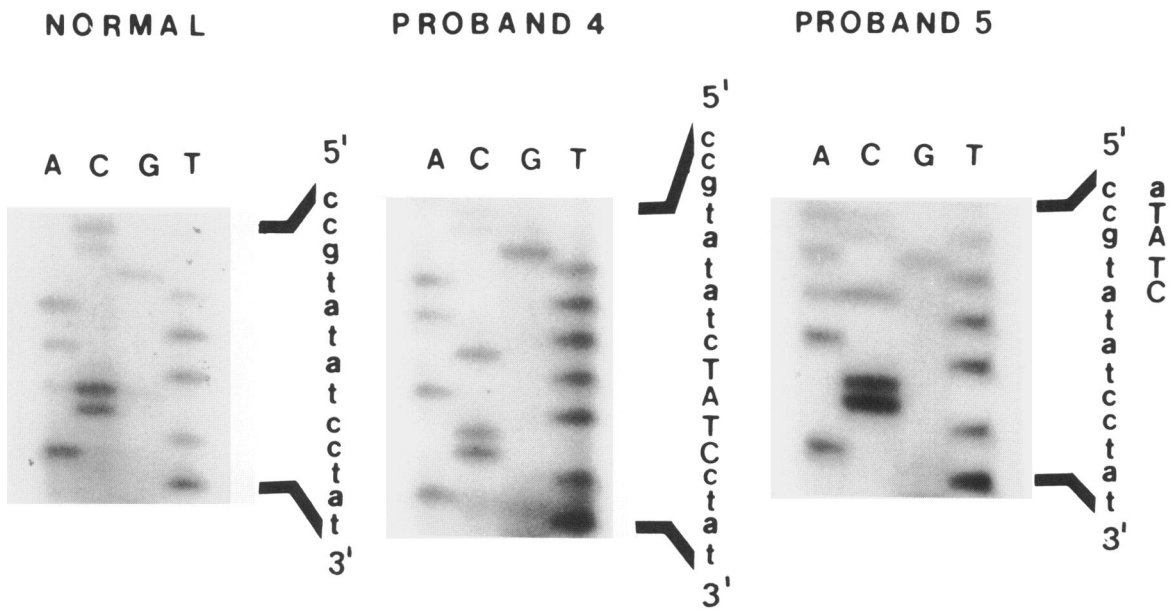

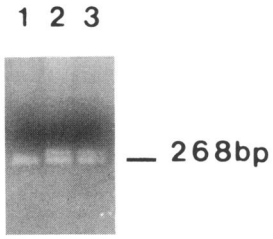

Figure 1 *Top*, Sequence analysis of Hex A α-subunit exon 11 in probands 4 and 5. The inserted nucleotides TATC (at position 1278) in both alleles from proband 4 and in one allele from proband 5 are indicated with capital letters. *Left*, Heteroduplex analysis of Hex A α-subunit exon 11 from the obligate heterozygotes in family 6. DNA from a normal control (lane 1) yields a 268-bp product on PCR amplification. DNA from the mother and father of affected children (lanes 2 and 3, respectively) produces doublets, the result of heteroduplexes formed during amplification between normal DNA strands and those with the 4-bp insertion.

TSD allele is a G→A transition at position +1 of intron 9, changing the invariant GT of the donor splice site to AT. *Nla*III digestion of the exon 9 PCR product yielded three bands of 221 bp, 144 bp, and 77 bp, a result consistent with heterozygosity for the G→A transition in intron 9 (+1) (fig. 2).

Pedigree Data

Pedigrees extending up to 16 generations were constructed for seven of the obligate TSD carriers who were heterozygous for the exon 11 mutation. Relatives shown, by enzyme and molecular analysis, not to be carriers of the exon 11 insertion were excluded from the pedigrees. The seven obligate carriers were born within 70 miles of each other in Allen, Acadia, Jefferson Davis, and Lafayette Parishes of southwest Louisiana. For six of the seven exon 11 insertion carriers, all ancestors were from families that have been in southwest Louisiana at least since the 1850s. The majority of these ancestors came to the area between the mid-1700s and 1800. In addition to Cajun relatives who came to Louisiana 2 centuries ago, the remaining insertion carrier has relatives from England, Ireland, and Wales, who did not come to Louisiana until the late 1800s.

A single ancestral couple was identified that was common to five of the seven obligate carriers for whom

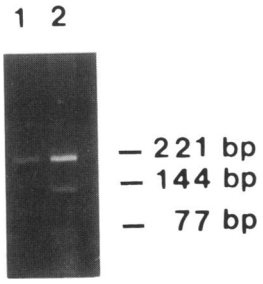

Figure 2 *Nla*III digestion of PCR-amplified DNA from Hex A α-subunit exon 9/intron 9 junction. Digestion does not alter the size of the 221-bp PCR product from a normal control (lane 1). Digestion of DNA from proband 5 (lane 2) produces three fragments—221 bp, 144 bp, and 77 bp—indicating that proband 5 is heterozygous for the exon 9 mutation.

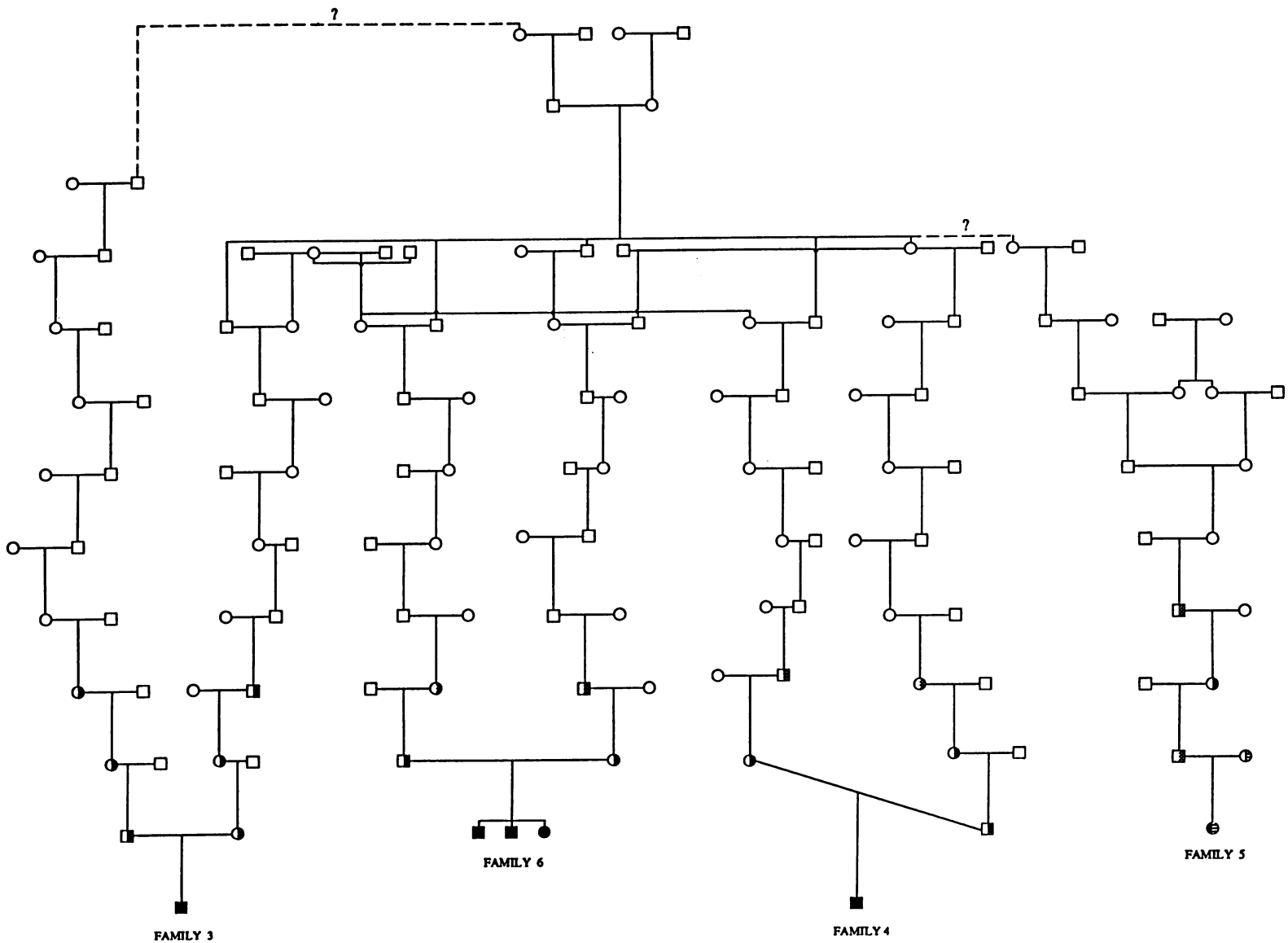

Figure 3 Partial pedigree of families 3–6. Completely blackened figures indicate affected individuals. Half-blackened figures indicate exon 11 insertion mutation heterozygotes detected by enzyme assay and heteroduplex analysis. Half-stippled figures indicate presumed exon 11 insertion mutation heterozygotes on the basis of enzyme and heteroduplex results among relatives. Half-striped figures represent exon 9 mutation heterozygotes. The pedigree was produced by Pedigree/Draw (Mamelka et al. 1987).

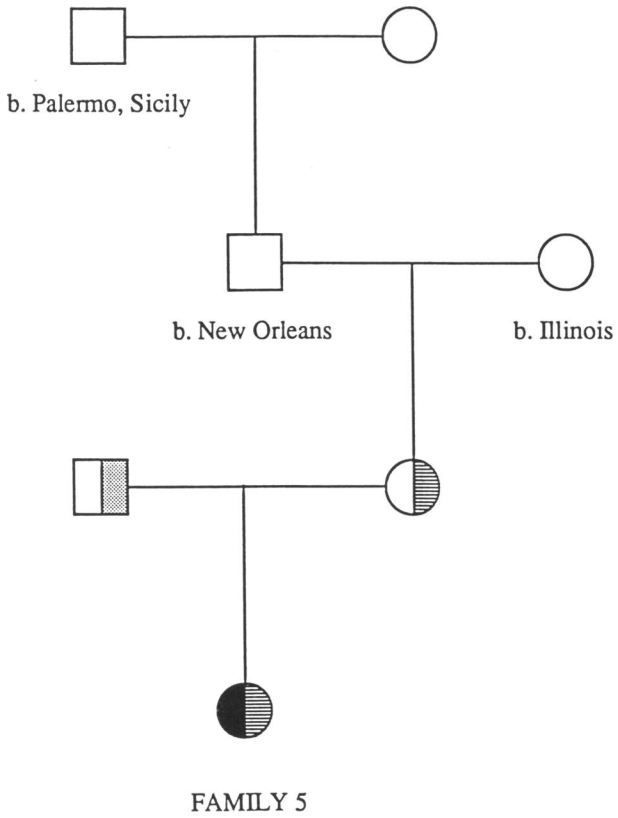

Figure 4 Pedigree of maternal line of family 5. Half-striped figures are exon 9 mutation heterozygotes. The half-shaded figure is an exon 11 insertion mutation heterozygote. The pedigree was produced by Pedigree/Draw (Mamelka et al. 1987).

extensive pedigree data were available (fig. 3). The remaining two obligate carriers have relatives with surnames indicating relationship to this couple, although the exact nature of the relationship could not be documented. This common ancestral couple is not known to be Jewish and came to Louisiana, from France, in the early 1700s. A four-generation pedigree was constructed for the maternal line of family 5, in which the intron 9 mutation is present (fig. 4). The earliest members of this family to arrive in Louisiana came approximately 100 years ago, and the remaining branches of the family have been in the area approximately 30 years. This family was not of Cajun ancestry but, rather, of Sicilian and unidentified European origins. Because additional pedigree and TSD-carrier-status information is unavailable for individuals in the third generation of family 5, the possible geographic origin of the intron 9 mutation cannot be determined. To date, the intron 9 mutation has not been identified in any other Cajun families.

Discussion

Two different infantile TSD alleles were found to be present in the Cajun population of southwest Louisiana. One, the exon 11 4-bp insertion, accounted for 92% (11/12) of abnormal alleles investigated. This insertion mutation is found in 70% of Ashkenazi TSD carriers, as well as in 16% of non-Jewish TSD carriers (Paw et al. 1990; Triggs-Raine et al. 1990). The remaining abnormal allele observed was a G→A transition at position +1 of intron 9 (Akli et al. 1991).

The ability to trace most relatives of the obligate TSD carriers to the first family members who arrived in Louisiana provided a basis upon which to estimate the length of time that the two TSD mutations had been in the Cajun population. The families of six of seven exon 11 insertion carriers for whom extensive pedigree information was available had been in southwest Louisiana since 1850 or earlier. The remaining family had relatives who had been in southwest Louisiana since its founding 2 centuries ago, as well. Therefore, the exon 11 insertion mutation has been in southwest Louisiana since 1850 and probably since the founding of the Cajun community. Such a long period of time would have given this mutation an opportunity to become widely distributed throughout the population. Carriers no longer would necessarily be closely related, and at-risk individuals might not be recognizable by their surnames. The intron 9 mutation appears to have entered the Cajun population only recently, thereby accounting for its reduced frequency relative to the exon 11 insertion.

The cause of the increased frequency of TSD among Ashkenazi Jews, whether from founder effect, heterozygote advantage, random drift, or a combination of these, has been debated (Chase and McKusick 1972; Myrianthopoulos et al. 1972; Spyropoulos et al. 1981). It has been suggested that the presence of multiple mutations points to heterozygote advantage as the mechanism for elevated infantile TSD gene frequencies in the Ashkenazi population (Myerowitz 1988). Either founder effect or genetic drift normally would result in the elevated frequency of a single mutation. However, it may not be necessary to invoke heterozygote advantage to explain the elevated frequency of multiple TSD alleles in population isolates. That founder effect is responsible, in part, for the increased occurrence of TSD in the Cajun population is strongly

suggested by two findings: (1) unlike the intron 9 mutation, the exon 11 insertion probably existed in the founding Cajun population of southwest Louisiana, and (2) a single couple has been identified that is common to a majority and perhaps all of the exon 11 carriers for whom extensive pedigree data are available. The Cajun population of southwest Louisiana could serve as a model to illustrate how founder effect and random genetic drift can result in a clustering of multiple TSD alleles within a single population.

Of practical importance to the community is the possibility that the exon 11 insertion is distributed beyond a few specific families in southwest Louisiana. A preliminary enzymatic screen of 230 individuals in Acadia Parish, Louisiana, indicated that the TSD carrier frequency in this community is increased over that in the general population, perhaps as much as 10-fold (data not shown). Specific TSD alleles and their frequencies were not determined, as DNA was not available from the screening participants. TSD carrier screening of the Louisiana Cajun population, similar to that in the Ashkenazi Jewish population, should be considered (*a*) to determine the significance of the public health problem presented by TSD and (*b*) to identify the specific communities within the Cajun population that are at risk.

Acknowledgments

The authors would like to thank Roy A. Gravel for his assistance in the identification of the Hex A α-subunit intron 9 mutations. This work was supported in part by the National Tay-Sachs and Allied Diseases Association, a Special Research Initiative Support and Graduate Research Assistantship award from the University of Maryland at Baltimore Designated Research Initiative Fund, and Kennedy/Hopkins NICHD Mental Retardation Research Center Core Grant HD24061. G.A.M. was a Meyerhoff fellow supported by the Joseph Meyerhoff Memorial Trusts.

References

Akli S, Chelly J, LaCarte JM, Poenaru L, Kahn A (1991) Seven novel Tay-Sachs mutations detected by chemical mismatch cleavage of PCR-amplified cDNA fragments. Genomics 11:124–134

Andermann E, Scriver CR, Wolf LS, Dansky L, Andermann F (1977) Genetic variants of Tay-Sachs disease: Tay-Sachs disease and Sandhoff's disease in French Canadians, juvenile Tay-Sachs disease in Lebanese Canadians, and a Tay-Sachs screening program in the French Canadian population. Prog Clin Biol Res 18:161–188

Catholic Diocese of Baton Rouge (1978) Records of the Catholic Diocese of Baton Rouge. Baton Rouge, LA

Chase GA, McKusick VA (1972) Controversy in human genetics: founder effect in Tay-Sachs disease. Am J Hum Genet 24:339–340

Conrad GR (1981) The German coast: abstracts of the civil records of St. Charles and St. John the Baptist Parishes 1804–1812. Center for Louisiana Studies, University of Southwest Louisiana, Lafayette

Deiler JH (1909) The settlement of the German coast of Louisiana and the creoles of German descent. Americana Germanica, Philadelphia

Hebert D (1974) Southwest Louisiana records: church and civil records of settlers. Hebert, Eunice, LA

——— (1978) Southern Louisiana records: church and civil records of settlers. Hebert, Eunice, LA

Jehn J (1980) Acadian descendants, vol. 4. J Jehn, Covington, KY

Kaback MM (1973) Thermal fractionation of serum hexosaminidases: applications to heterozygote detection and diagnosis of Tay-Sachs disease. Methods Enzymol 28: 862–867

Mamelka PM, Dyke B, MacCluer JW (1987) Pedigree/Draw for the Apple Macintosh. Southwest Foundation for Biomedical Research, San Antonio

Myerowitz R (1988) Splice junction mutation in some Ashkenazi Jews with Tay-Sachs disease: evidence against a single defect within this ethnic group. Proc Natl Acad Sci USA 85:3955–3959

Myrianthopoulos NC, Naylor AF, Aronson SM (1972) Founder effect in Tay-Sachs disease unlikely. Am J Hum Genet 24:341–342

Okada S, O'Brien JS (1969) Tay-Sachs disease: generalized absence of beta-D-N-acetylhexosaminidase component. Science 165:698–700

Paw BH, Tieu PT, Kaback MM, Lim J, Neufeld EF (1990) Frequency of three *Hex A* mutant alleles among Jewish and non-Jewish carriers identified in a Tay-Sachs screening program. Am J Hum Genet 47:698–705

Petersen GM, Rotter JI, Cantor RM, Field LL, Greenwald S, Lim JST, Roy C, et al (1983) The Tay-Sachs disease gene in North American Jewish populations: geographic variations and origin. Am J Hum Genet 35:1258–1269

Robichaux AJ (1981) Acadian exiles in St. Malo. Hebert, Eunice, LA

Rushton WF (1979) The Cajuns: from Acadia to Louisiana. Farrar Straus Giroux, New York

Sambrook J, Fritsch EF, Maniatis T (1989) Molecular cloning: a laboratory manual, 2d ed. Cold Spring Harbor Laboratory, Cold Spring Harbor, NY

Sandefur GL, Whittington HL (1982) Louisiana ahnentafels, ancestor charts, and family group sheets. Natchitoches Geneological and Historical Association, Natchitoches, LA

Sanger F, Nicklen S, Coulson AR (1977) DNA sequencing

with chain terminating inhibitors. Proc Natl Acad Sci USA 74:5463–5467

Shapira E, Blitzer MG, Miller JB, Africk DK (1989) Biochemical genetics: a laboratory manual. Oxford University Press, New York

Shore S, Myerowitz R (1990) A gel electrophoretic assay for detecting the insertion defect in Ashkenazi Jewish carriers of Tay-Sachs disease. Anal Biochem 186:179–181

Smith G (1990) The Cajuns: still loving life. Natl Geogr 178:40–65

Spyropoulos B, Moens PB, Davidson J, Lowden JA (1981) Heterozygote advantage in Tay-Sachs carriers? Am J Hum Genet 33:375–380

Tanguay C (1969) Dictionaire genealogique des familles Canadiennes. AMS Press, New York

Thurmond TF, DeFraites EB (1974) Genetic studies of the French Acadians of Louisiana. Birth Defects 10:201–204

Triggs-Raine BL, Feigenbaum ASJ, Natowicz M, Skomorowski M, Schuster SM, Clarke JTR, Mahuran DJ, et al (1990) Screening for carriers of Tay-Sachs disease among Ashkenazi Jews: a comparison of DNA-based and enzyme-based tests. N Engl J Med 323:6–12

Vidrine JO (1985) Love's legacy: the Mobile marriages recorded in French, transcribed, with annotated abstracts in English, 1724–1786. Center for Louisiana Studies, University of Southwestern Louisiana, Lafayette