Am. J. Hum. Genet. 59:1252–1261, 1996

Familial Transmission of the FMR1 CGG Repeat

Sarah L. Nolin,[1] French A. Lewis, III,[1,2] Ling Ling Ye,[1] George E. Houck, Jr.,[1] Anne E. Glicksman,[1] Pornprot Limprasert,[1] Shu Yun Li,[1] Nan Zhong,[1] Allison E. Ashley,[3] Eleanor Feingold,[4] Stephanie L. Sherman,[3] and W. Ted Brown[1]

[1]Department of Human Genetics, New York State Institute for Basic Research in Developmental Disabilities, and [2]CSI/IBR Center for Developmental Neuroscience and CUNY Graduate School Ph.D. Program in Biology, Staten Island; and [3]Department of Genetics and Molecular Medicine, Emory University School of Medicine, and [4]Department of Biostatistics, Emory University Rollins School of Public Health, Atlanta

Summary

To better define the nature of FMR1 CGG-repeat expansions, changes in allele sizes for 191 families with fragile X and for 33 families with gray-zone repeats (40–60) were analyzed. Expansion of the fragile X chromosome to the full mutation was seen in 13.4% of offspring from premutation mothers with 56–59 repeats, 20.6% of those with 60–69 repeats, 57.8% of those with 70–79 repeats, 72.9% of those with 80–89 repeats, and 97.3% of those with 90–199 repeats. For premutation fathers, the majority (62%) of their daughters had a larger repeat number, while a few had either a smaller (22%) or the same (16%) repeat number, compared with their fathers' sizes. However, daughters with a smaller repeat number were observed only if their fathers had ≥80 repeats. Fifteen (39.5%) of 38 such daughters carried a smaller repeat than did their fathers. We observed that a similar repeat number was inherited more often than expected by chance, among the members of a sibship segregating fragile X. This familial clustering, observed in the offspring of both males and females with a premutation, implies there may be an additional factor, independent of parental repeat size, that influences CGG-repeat instability. Instability in gray-zone allele transmissions was observed in 25% of alleles with 50–60 CGGs but in <8% of those with 40–49 CGGs. Examination of gray-zone allele organization revealed that long tracts of pure CGGs (>34) are not always unstably transmitted. These results raise new questions regarding the familial factors that may determine transmission expansions.

Introduction

The fragile X syndrome, a common cause of inherited mental retardation (Brown and Jenkins 1992), derives its name from the cytogenetic fragile site observed at Xq27.3 in affected males. The syndrome is remarkable because of its unusual inheritance patterns (Sherman et al. 1984, 1985) and the unstable nature of its "dynamic" mutation (Richards and Sutherland 1992). The mutation is an amplification of the CGG-trinucleotide repeat that is inherited in unstable fashion in fragile X families and shows intergenerational expansions (Fu et al. 1991). The CGG repeat is located in the 5′ UTR of a gene, FMR1 (fragile X mental retardation) (Verkerk et al. 1991). Normal individuals have ~10–55 copies of the trinucleotide repeat, with 30 being the most common (Brown et al. 1993; Snow et al. 1993). Male and female carriers with a "premutation" have a repeat of ~56–200 CGGs. These carriers generally have no mental impairment and do not express the cytogenetic fragile site. Affected individuals with the "full mutation" have >200 copies of the triplet repeat, as well as methylation of an associated CpG island, which results in the absence of FMR1 mRNA expression (Pieretti et al. 1991). Additional evidence that the absence of the FMR1 protein is responsible for the disorder is based on finding patients with the fragile X phenotype who have deletions in the gene (Gedeon et al. 1992; Wöhrle et al. 1992; Meijer et al. 1994; Hirst et al. 1995; Lugenbeel et al. 1995). Although the function of the FMR1 protein is unknown, the protein has RNA-binding properties and has been shown to bind to a limited set of messenger RNAs including its own message (Ashley et al. 1993). One severely retarded patient with phenotypic features of the syndrome has been identified with a point mutation within this RNA-binding domain (DeBoulle et al. 1993). This finding indicates the importance of the domain and also that mutation of this gene is sufficient to produce the fragile X syndrome.

Several studies (Fu et al. 1991; Rousseau et al. 1991; Snow et al. 1993; Loesch et al. 1995) have examined the stability of the CGG repeat, both within families with the fragile X syndrome and in the normal population. When the repeat number is <40, intergenerational transmissions are highly stable, although one expansion, from 29 to 39 CGGs, in a paternal allele has been re-

Received January 22, 1996; accepted for publication September 24, 1996.

Address for correspondence and reprints: Dr. W. Ted Brown, Human Genetics Department, New York State Institute for Basic Research, 1050 Forest Hill Road, Staten Island, NY 10314.

© 1996 by The American Society of Human Genetics. All rights reserved.

0002-9297/96/5906-0011$02.00

ported (Macpherson et al. 1995). In addition, occasional unstable transmissions of alleles in the 40–54-repeat range have been reported (Fu et al. 1991; Snow et al. 1993; Reiss et al. 1994). No well-defined boundary exists between the normal and premutation state. The term "gray zone" (Eichler et al. 1994) has been used to describe this region of repeat numbers, which includes high/normal- and low-premutation alleles. In families in which fragile X has not been identified, the stability of gray-zone alleles is uncertain. Some studies suggest that stability of the CGG repeat is linked to the presence of AGG interspersions located every 8–12 CGGs in most normal alleles (Eichler et al. 1994, 1996; Hirst et al. 1994; Kunst and Warren 1994; Snow et al. 1994; Zhong et al. 1995). Approximately two-thirds of males with the premutation have no AGGs, and approximately one-third have one AGG at the 5′ end of the repeat (Snow et al. 1994; Zhong et al. 1995). In families with fragile X, instability appears to be influenced by two additional factors: (1) the sex of the parent carrying an expanded repeat and (2) the number of repeats carried by that parent. Expansion to the full mutation is observed only when a premutation is passed through a female and not through a male. The risk for expansion to a full mutation in the offspring of a female with a premutation is related to her repeat number, with a higher likelihood being associated with larger CGG repeats. Females with the full mutation pass only full-mutation repeats to their offspring, whereas males with either a premutation or a full mutation pass premutation alleles to their daughters.

We have examined transmission of the FMR1 CGG repeat in 191 families with fragile X and in the general population, in order to identify factors that influence instability of the repeat. A comparison of the repeat numbers in fathers with a premutation and in their daughters indicates that the daughters frequently have inherited smaller alleles when their fathers have >80 repeats. We also have found evidence that, in addition to gender and repeat number in the carrier parent, another factor influences the magnitude of expansion. The nature of this factor has yet to be defined. Last, we have found that gray-zone alleles (40–60 repeats) in families with no previous history of fragile X varied in their stability—but that none of them expanded to a full mutation in one generation.

Subjects and Methods

Subjects

Subjects in the 191 families with fragile X had been referred for DNA linkage and diagnostic studies. In order to analyze gray-zone allele stabilities, 33 families with repeat numbers of 40–60 were selected after being identified in a screening of pregnant females and developmentally delayed individuals (Brown et al. 1996*b*). In addition, one family (R127) with a gray-zone size allele was referred to us for analysis because a CGG instability had been observed previously (B. Allitto [Integrated Genetics], personal communication). None of the gray-zone alleles previously had been associated with the fragile X syndrome. In some cases, however, a gray-zone allele was segregating, by chance, in a fragile X family. The study was approved by the internal review board at the New York State Institute for Basic Research, and informed consent was obtained from the subjects.

PCR Analysis

PCR was performed as described elsewhere (Brown et al. 1993), with the following changes. Amplifications were carried out in 10-μl reactions with 0.75 mM $MgCl_2$, 7-deaza-dGTP substituted for dGTP, 1 × buffer II (Perkin-Elmer), 0.25 U of Amplitaq (Perkin-Elmer), and 50 ng of template DNA. Primers 1 (5′ GAC GGA GGC GCC GCT GCC AGG 3′) and 3 (5′ GTG GGC TGC GGG CGC TCG AGG 3′) were used for amplification in an MJ thermocycler, with an initial denaturation step of 94°C for 2 min, followed by 30 cycles of 94°C for 1 min, 62°C for 1 min, and 72°C for 2 min. Family members were analyzed in parallel whenever possible, to insure an accurate determination of CGG-repeat-size changes. Interspersed AGGs were analyzed as described elsewhere (Zhong et al. 1995).

Statistical Analysis

To determine if other factors, in addition to gender and number of repeats, influenced the magnitude of expansion, we examined the size of expansion from a parent with a premutation to a child in sibships in which more than one child received the fragile X allele. Since most families were clinically referred, one offspring with a full mutation was excluded from each sibship, to correct for ascertainment bias. Offspring of males and females with a premutation were analyzed separately. To test for familial clustering of offspring repeat size, analysis of variance (ANOVA) was performed on the repeat size in the offspring after adjustment for parental repeat size was accomplished by linear regression.

For mothers with a premutation, a second test was performed to determine if there was a tendency to transmit either all premutation-size or all full-mutation-size alleles to carrier offspring. We used logistic regression to determine the probability of expansion to the full mutation, on the basis of the carrier mother's repeat size. For each sibship, this probability was used in a randomization test to predict the mutational class (premutation or full mutation) of each carrier offspring. The number of sibships in which all offspring were predicted to have the same mutational class was recorded for 1,000 simulations. This was used to provide the signifi-

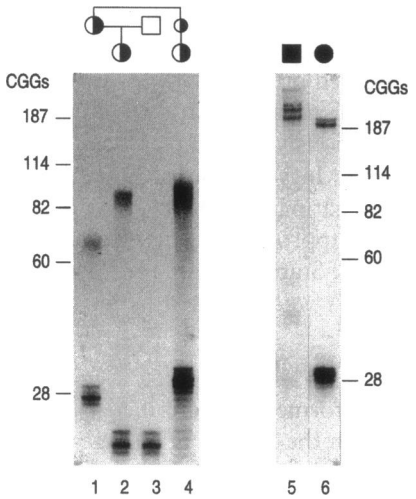

Figure 1 Examples of FMR1 CGG transmissions analyzed by PCR. Lane 1, Premutation female (28; 65 CGGs). Lane 2, Daughter of premutation female (20; 95 CGGs). Lane 3: Husband of premutation female (20 CGGs). Lane 4, Niece of premutation female (30; 100 CGGs). Lane 5, Full-mutation male (>200 CGGs). Lane 6, Full-mutation female (30; >200 CGGs). Markers on either side of the figure indicate the number of CGG repeats.

cance level for the number of observed sibships in which all offspring had the same mutational class.

Results

FMR1 CGG transmissions were analyzed for 191 fragile X families that included 255 females with a premutation, 34 males with a premutation, 109 females with a full mutation, and 229 males with a full mutation. In figure 1, the method of PCR analysis is illustrated for one small family, a male with a full mutation and a female with a full mutation.

Premutation Males

Twenty-seven fathers with premutations had a total of 69 daughters. Forty-three (62%) of these daughters inherited a larger premutation size than was seen in their fathers, 11 (16%) inherited the same size, and 15 (22%) inherited a smaller size (fig. 2). Among the 31 daughters of males with a premutation with <80 repeats, the trinucleotide repeat most commonly expanded (87% of the time) and never contracted. Of the 38 daughters of males with a premutation ≥80 repeats, 15 (39.5%) carried a smaller premutation size than was seen in their fathers. Although the number of daughters in this group was small, the likelihood for contraction appeared to be linked to the fathers' repeat size. The daughters of males with 80–99 repeats had likelihoods to expand (44%) or contract (34%) that were similar, and those daughters of males with ≥100 repeats had repeats that were more likely to contract (67%). The contractions in the daughters had a range of 2–20 CGGs, with a mean of 10, whereas the range of expansions was 2–54, with a mean of 18. The contractions did not continue in the next generation, in which a full mutation was inherited from many of the daughters who carried a contraction.

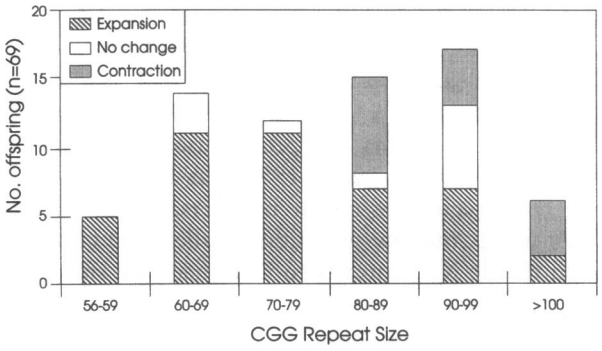

Figure 2 CGG transmissions from premutation father to daughter. Six repeat-size categories of the premutation fathers are shown on the X-axis.

Premutation Females

A summary of the fragile X CGG transmissions from 255 females with premutations to their 393 offspring is illustrated in figure 3. The probability of expansion to the full mutation in offspring increased as the repeat size in the mother increased. The smallest premutation size in a mother that expanded to the full mutation was 59 triplets. This was seen among offspring of two unrelated women who, together, had three full-mutation children. Unlike the daughters of males with a premutation, none of the offspring who inherited maternal premutation alleles had the same repeat number as was seen in their mothers. Nearly all of them (98.7%) carried a larger repeat size than was seen in their mothers. There were five exceptions, in which the offspring inherited a smaller repeat size. In two of these, a mother-son reduc-

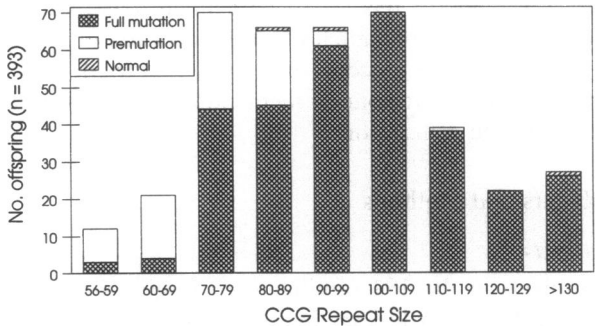

Figure 3 CGG transmissions from premutation mother to offspring. Nine repeat-size categories of the premutation mothers are shown on the X-axis. Full-mutation offspring are considered to be those having 200 CGGs.

Table 1

Expansion of Fragile X Chromosome to Full Mutation in Offspring of Mothers with Premutation

No. of Maternal CGG Repeats	No. of Full Mutations/No. of Meioses			
	Fu et al. (1991)	Snow et al. (1993)	Present Study	Total
56–59	0/7	0/3	3/12	3/22 (13.4%)
60–69	1/6	2/7	4/21	7/34 (20.6%)
70–79	10/14	5/18	44/70	59/102 (57.8%)
80–89	14/17	19/24	45/66	78/107 (72.9%)
90–99	12/12	10/10	61/66	83/88 (94.3%)
100–109	7/7	4/4	70/70	81/81 (100%)
110–119	...	8/8	38/39	46/47 (97.8%)
120–129	...	2/2	22/22	24/24 (100%)
130–199	...	...	26/27	26/27 (96.3%)
Total	44/63	50/76	313/393	407/532 (76.5%)

tion to a smaller premutation size was observed (from 70 to 65 in one case and from 110 to 82 in the other case). In three cases, mothers with a premutation passed fragile X alleles that had contracted into the normal range to their daughters (from 82 to 33 in one case, from 95 to 36 in the second case, and from 145 to 43 in the third case). In each of these three cases, linkage analysis with flanking markers indicated that the daughter had received her mother's fragile X chromosome (Brown et al. 1996*a*). These cases suggest that the reversion rate—of a premutation allele to a normal allele—is low, ~0.76% (3/393). No offspring of these daughters were available to allow examination of the stability of these reverted alleles. There were no examples of a reduction in size from a full-mutation female to either a premutation or normal size allele.

Expansion of the fragile X chromosome to a full mutation in the offspring of mothers with a premutation is shown in table 1 and includes results of the present study as well as the findings of Fu et al. (1991) and Snow et al. (1993). The full mutation was seen in 13.4% of fragile X offspring inheriting the fragile X chromosome from mothers with 56–59 repeats, in 20.6% with mothers with 60–69 repeats, in 57.8% with mothers with 70–79 repeats, and in 72.9% with mothers with 80–89 repeats. The combined results indicate that a repeat ≥90 CGGs has a high (97.3% [260/267]) risk of progressing to the full mutation. The risk is <100% because of the observed reversions.

Most (80.4%) of the 255 mothers with a premutation included in our survey had a repeat size in the 70–119 range (data not shown). Only 19 (7.4%) of 255 were identified as having 56–69 repeats. Since this size does not usually expand to a full mutation in the offspring, such women may have been less likely to be ascertained. The number of females identified in the largest premutation sizes, >120, was small also (31 [12.2%]). This probably reflects a low frequency of these sizes that is due to the high rate of alleles with 80–100 repeats expanding to the full mutation in the next generation.

Identification of a Factor Influencing Size of Expansion

We examined the repeat size among the daughter sets of 22 males with a premutation and observed a clustering of similar repeat sizes within sibships, as illustrated in figure 4*A*. For example, in the first family shown, a father with 56 CGGs had three daughters each with 59 repeats; in the fourth family, a father with 60 repeats had two daughters each with 114 CGGs. Although the expansions between the two sibships were different, the expansions within each sibship were similar. In 13 families the differences between the daughters were ≤10 repeats, in 5 families they were ≤20 repeats, and only 4 had a difference of >20 repeats. Our observations of intergenerational changes suggest that another factor, in addition to gender and parental repeat size, may influence the size of expansion within a sibship.

We examined the repeat sizes among the offspring of females with a premutation who had more than one child inheriting the fragile X chromosome (fig. 4*B*). Among these families, we observed a number of female carriers with several premutation children. For example, in the 18th family, a female with 85 repeats had four premutation children (one each with 100, 110, 110, and 110 CGGs), and in the 20th family a female with 90 repeats had three premutation children (one each with 115, 120, and 135 CGGs). In many other families, all offspring inherited a full mutation. Thus, the transmissions from female carriers showed a clustering effect similar to that seen in males.

The observed clusterings were tested for statistical significance. Using ANOVA, we found that repeat sizes in daughters of fathers with a premutation were more similar within families than among families ($n = 22$, $P < 1$

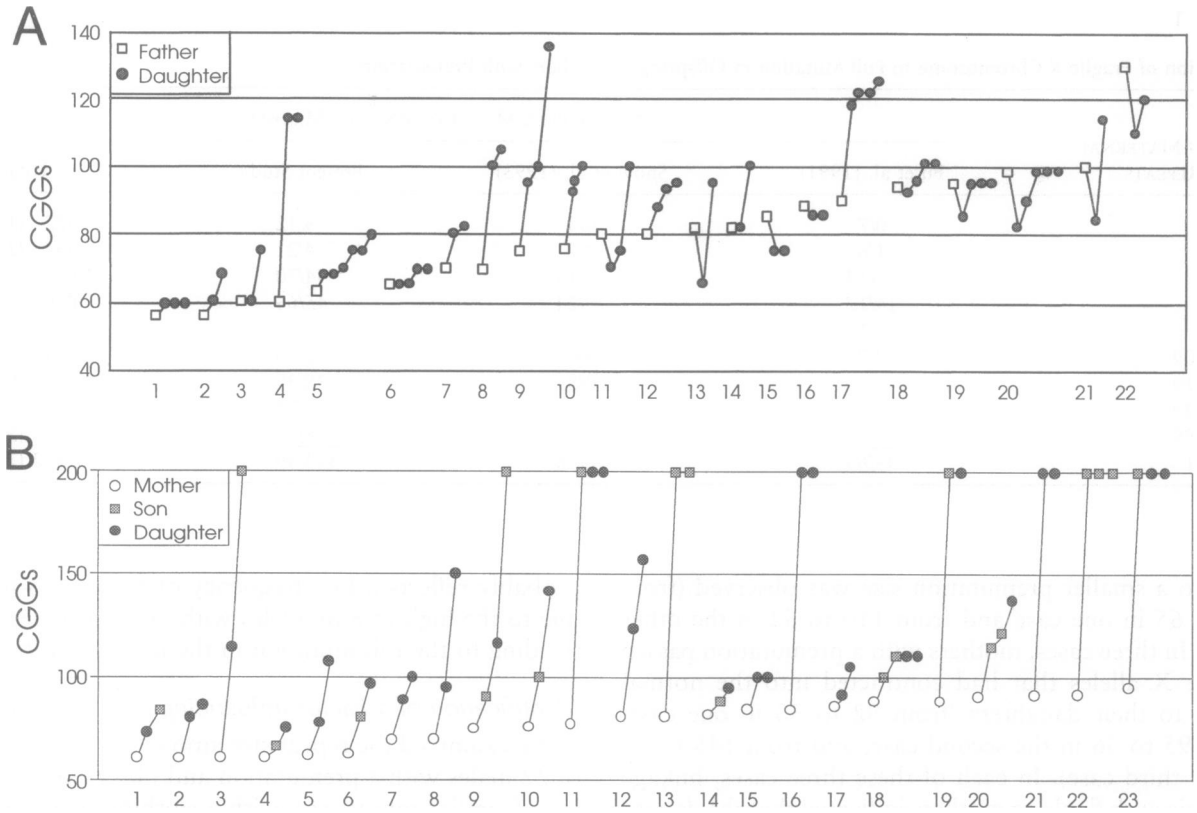

Figure 4 Clustering in CGG-size inheritance. *A*, Father-daughter transmissions. *B*, Mother-offspring transmissions. Each connected group of circles and squares represents a family. The families are ordered by the repeat size in the parent, and the offspring are ordered by repeat size. The numbers on the *X*-axis designate the families. Full mutations are shown as 200 CGGs.

$\times 10^{-6}$). We analyzed the expansions in mothers who had a premutation, in two ways. Since these expansions may result in either of two mutational classes, it is possible that the two outcomes represent separate expansion processes. Therefore, we first examined if there was a familial tendency for the offspring sibships of female carriers to have the same mutational class. In 28 of 31 sibships, the offspring had the same mutational class ($P = .07$; randomization test). Although this statistic was not significant, the trend suggested that premutation and full-mutation sibships should be analyzed separately. Since repeat size is more accurately determined for offspring with a premutation, we performed the ANOVA analysis on the sibships containing only offspring with a premutation, and we found a significant familial clustering of repeat sizes ($n = 19$, $P < 1 \times 10^{-6}$; ANOVA).

We examined both the AGG interspersion pattern and sex of the offspring, to determine if either could explain the clustering results. For the AGG analysis, only fathers with a premutation were examined, since these studies are limited to those with a single X chromosome and cannot be performed on females. The AGG patterns of 19 of the fathers with a premutation were examined. No relationship was observed between the AGG-interruption pattern in the fathers (12 had no AGG, and 7 had one AGG) and the repeat-size clustering in the daughters. Recently, it has been suggested that expansion to the full mutation in passage from carrier mothers to their offspring is also dependent on sex of the offspring (Rousseau et al. 1994; Loesch et al. 1995). To determine if the sex of the offspring may explain the familial clustering effect, we performed ANOVA on the repeat size in the offspring after adjusting for parental repeat size by linear regression. We observed no correlation between sex of the offspring and repeat size in the offspring ($n = 31$, $P = .75$). Thus, we have identified a novel but uncharacterized familial factor that influences the magnitude of the expansion in offspring sibships of both male and female carriers of fragile X.

Stability of Gray-Zone Alleles

Although nearly all alleles of <40 repeats are stably inherited, the stability of alleles in the region termed the "gray zone" with 40–60 repeats, at the upper end of the normal range and the lower range of premutation alleles, is less certain. Of 2,903 X chromosomes examined in our laboratory from random individuals with no known family history of fragile X, 138 (4.75%) alleles

in this gray zone were identified, 119 (4.1%) with 40–49 repeats, and 19 (0.65%) with 50–60. Thus, alleles with 40–60 CGGs are present in approximately 4.75% of males and 9.5% of females in the general population. To address the question of gray-zone allele stability, we analyzed the repeat transmissions in 21 families with alleles with 40–49 CGGs, and 16 families with alleles with 50–60 CGGs. The gray-zone alleles in these families had not previously been associated with the fragile X syndrome. Gray-zone alleles, occasionally observed in fragile X families, were included in these studies because those particular alleles had not expanded to the full mutation. One family (R127) in the 40–49 range showed an increase of 2 repeats from 45 to 47 in three of five daughters who inherited the allele. It should be noted that this allele was not randomly ascertained, but was referred to us because an instability had been observed. Four of the 16 families with repeat numbers in the 50–60 range carried an unstable allele with three (F124, F782, and F1314) expanding to a larger number of repeats and the other (F396) contracting from 52 to 48 CGGs. Pedigrees of the one family with an unstable 45-repeat allele and all families with alleles with 50–60 repeats are shown in figure 5. One family, F124, included a premutation female who was a compound heterozygote carrying 2 unstable repeats of 54 and 75. RFLP analysis of this family indicated the mother's 54 allele was passed to her daughter and expanded to 59 repeats. In the next generation, this allele increased to 70 repeats in her son. The largest change in repeat size in this study occurred in family F1314 in a female with 55 repeats that expanded to 65 in her fetus. This pregnancy was terminated because the mother did not want to transmit an unstable allele to the next generation. The results of our analysis and other reports of such gray-zone alleles (Fu et al. 1991; Snow et al. 1993; Reiss et al. 1994) are summarized in table 2. The combined results show that 7.7% of families with alleles in the 40–49-repeat range and 25% in the 50–60-repeat range were unstable.

We examined the AGG pattern in families with a repeat of 40–60 to compare the allele stability with the AGG interspersion pattern. AGG analysis of random individuals with gray-zone alleles is illustrated in figure 6 and includes samples from F1958 and F1111 in lanes 5 and 7, respectively. Because these studies are limited to males, only 22 of the families could be analyzed. The AGG patterns, the number of pure CGGs, and the meiotic stability are given in table 3. Overall, 9.1% (2) of families had three AGGs, 50% (11) had two, 36.4% (8) had one, and 4.5% (1) had none. Unstable meioses were observed in three families, as illustrated in figure 5. In the first family (R127), the 45 triplets in the father with one AGG interruption and 35 pure CGGs expanded to 47 repeats in three daughters, but was unchanged in two other daughters. In the second family (F124), a 54-repeat allele expanded in the third generation to a 70-repeat allele with no AGGs. In the third family (F782), a mother with a 53-repeat allele passed an expanded allele of 56 repeats to her daughter and an unchanged allele to two sons, both of whom carried one AGG. The daughter's 56-repeat allele was stably inherited by her child. Thus, in this family with one AGG and 41 pure CGGs, one of four meioses showed instability, while in F124 with no AGGs and 70 pure CGGs in the grandson, two of two meioses showed instability. Two families with 59 triplets were studied. In one (F1111), an allele of 59 was stably inherited in five meioses despite 39 uninterrupted CGG repeats. In a second (F1689), a father, who had 59 repeats with a single AGG and 50 pure CGGs, passed the 59-repeat allele unchanged to his daughter, who also stably transmitted this allele to her son. In summary, eight families had >34 pure CGGs, but only three families showed instability in six of 11 meioses. These results demonstrate that alleles with 35-50 pure CGGs do not always show instability.

Discussion

In order to better characterize the determinants of FMR1 repeat instability, we analyzed 191 families with fragile X for intergenerational changes in repeat number. Our results show that the risk of expansion from parent to offspring depends on the parent's sex and allele size and confirm previous studies (Fu et al. 1991; Heitz et al. 1992; Yu et al. 1992; Snow et al. 1993; Väisänen et al. 1994; Fisch et al. 1995; Loesch et al. 1995). However, precise size determination has allowed us to make additional observations between inheritance and parental allele size.

We observe that males with a premutation with ⩾80 CGGs frequently have daughters with smaller alleles. Reductions in the CGG-repeat size in father-daughter transmissions have also been noted by other investigators (Snow et al. 1993; Väisänen et al. 1994; Fisch et al. 1995), but our results imply that the reductions are primarily a function of size.

The presence of premutation sperm in males with a full mutation (Reyniers et al. 1993) and the father-daughter contractions observed in premutation males with ⩾80 repeats suggest that expansion of the FMR1 CGG repeat is different in the male germ line as compared to somatic tissues. Large expansions may be unstable in the male germ line so that a reduction in repeat number occurs. An alternative explanation is that DNA replication in the male germ line may be more faithful than in somatic tissue. As a consequence, the germ line may have fewer repeats than somatic tissue as previously suggested (Ashley and Sherman 1995). Thus, the appar-

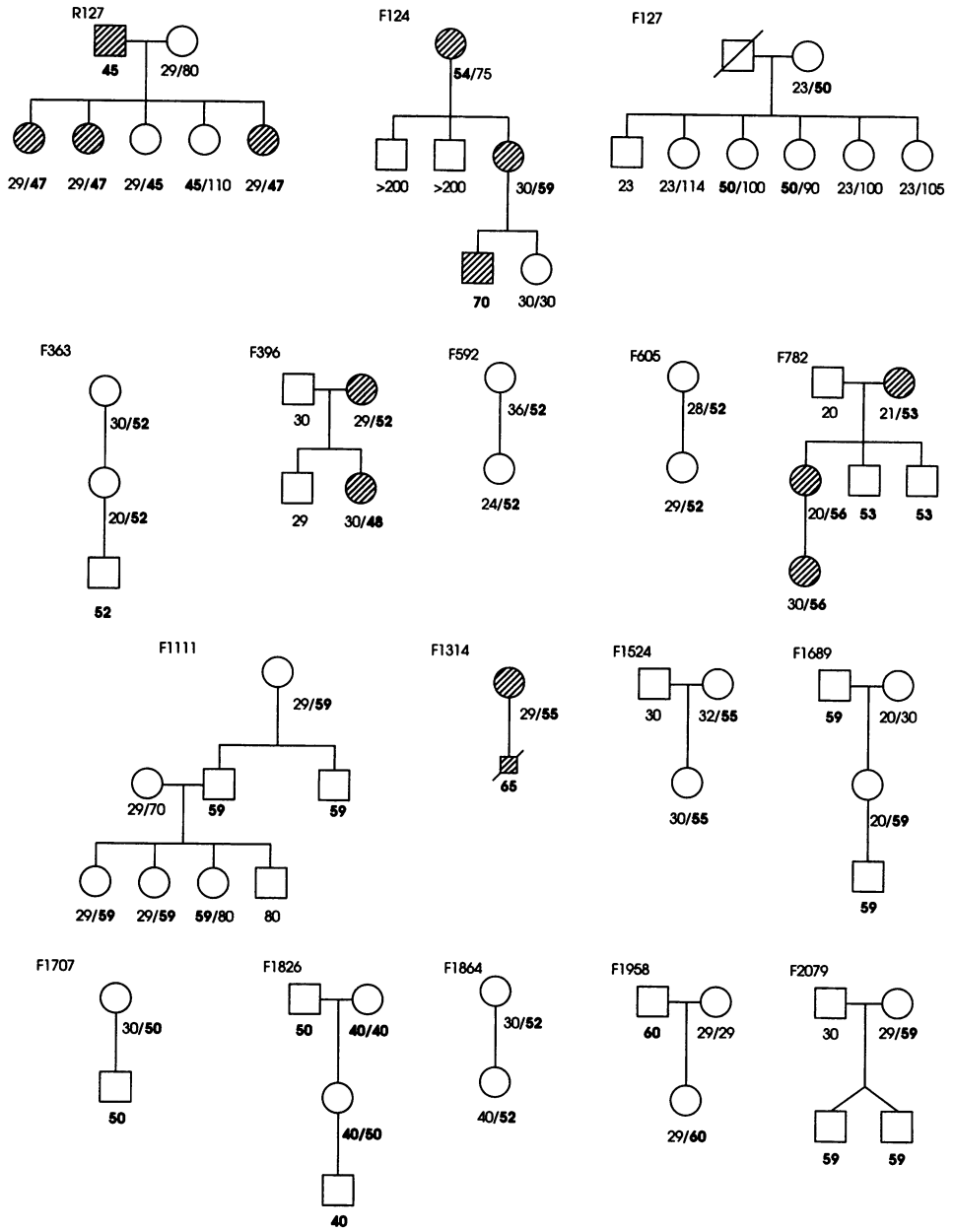

Figure 5 Pedigrees of families with gray-zone alleles with 40–60 repeats. The pedigrees include one family (R127) with an unstable 45 repeat and all families with a repeat size of 50–60. The gray-zone alleles are shown in boldface. Individuals with alleles showing familial instability are denoted by hatching.

ent contractions in the daughters of males with a premutation may actually reflect little or no change in the father's germ-line allele size.

Sibship Clustering

In our families with the fragile X syndrome, the repeat numbers observed among multiple offspring of both male and female premutation carriers seem to be more similar in size within a sibship than among sibships. This observation suggests that another factor(s), outside of the repeat itself, may affect CGG expansion. Differences in DNA synthesis or repair mechanisms due to genes on other chromosomes could influence replication errors in the trinucleotide repeat. Alternatively, sequences adjacent to the CGG repeat may affect the fidelity of repeat replication. A similar pattern in sibships has also been observed in the congenital form of myotonic dystrophy (Koch et al. 1991; Tsilfidis et al. 1992) and the juvenile form of Huntington disease (Telenius et al. 1993). The evidence that an additional factor or factors

Table 2

Number of Families with Unstably Inherited Gray-Zone Alleles

	No. of Unstable Alleles	Total No. of Alleles
	40–49 Repeats	
Present study	1	21
Reiss et al. (1994)	2	14
Fu et al. (1991)	0	2
Snow et al. (1993)	0	2
Total	3 (7.7%)	39
	50–60 Repeats	
Present study	4	16
Reiss et al. (1994)	0	1
Fu et al. (1991)	1	1
Snow et al. (1993)	0	2
Total	5 (25.0%)	20

external to the FMR CGG is involved in triplet expansion suggests that two women with the same repeat size may have significantly different risks for having a full mutation child. A larger study of the fragile X offspring of males and females with a premutation may help to clarify such risks.

Stability of Gray-Zone Alleles

The potential instability of gray-zone alleles presents difficult issues for genetic counseling. The primary concern is the risk of a gray-zone allele expanding to the full mutation. In our laboratory, 59 repeats was the smallest repeat number expanding to the full mutation, and no reports of an allele with fewer repeats expanding to the full mutation in one generation have been published. Women carrying alleles with 40–49 repeats are apparently not at risk for expansion to the full mutation in their offspring. These alleles may, however, carry a small risk (7.7%) of an increase of a few repeats. For alleles with 50–60 repeats, there is a higher risk (25%) of an increase in repeat number, and there also may be a small risk of having an affected child. Thus, for women with alleles of 50–60 repeats, prenatal diagnosis might be considered.

The risk of any allele instability of 40–60 repeats is of secondary concern. The presence of long regions of pure CGGs without AGG interruptions has been correlated with instability in families with fragile X (Eichler et al. 1994; Kunst and Warren 1994; Snow et al. 1994; Zhong et al. 1995). Eichler et al. (1994) have suggested that 34–37 pure CGGs is a threshold for repeat instability in the fragile X gene, with larger numbers conferring a higher likelihood of expansion. Our analysis of eight families with >34 pure CGGs but <60 repeats overall indicated that, unlike fragile X families, these eight gray-zone families often had stable CGG transmissions even with long pure CGG tracts. One family (F1689) with 50 pure CGGs and 59 repeats was particularly noteworthy because the allele was passed, without expansion, from father to daughter and then to grandson. Our results suggest that long tracts of pure CGGs at the 3′ end are linked to instability but that these are not sufficient to cause expansion.

In summary, we have observed that the daughters of premutation males with ≥80 repeats frequently carried

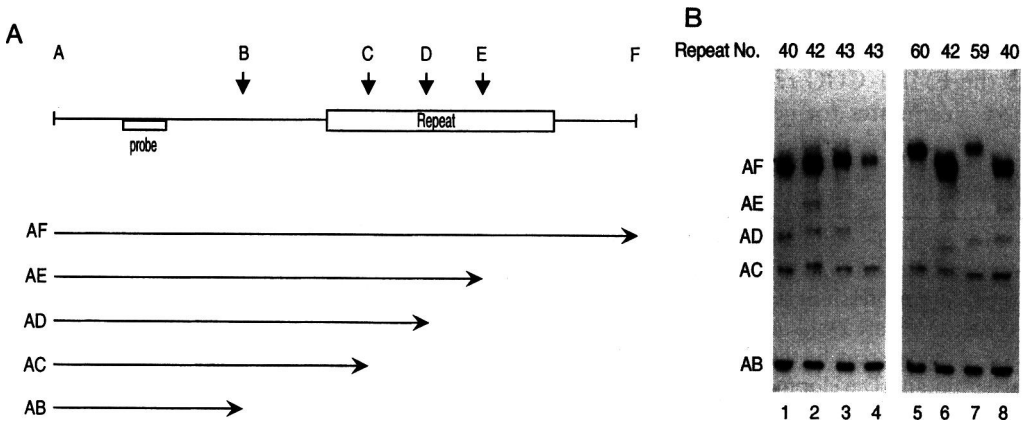

Figure 6 AGG interspersion pattern of males with gray-zone alleles. *A*, Diagram of fragment amplified by PCR. The locations of AGGs that are recognized by *MnlI* are indicated by vertical arrows. The areas containing the repeat region and the hybridization probe are shown as boxes. The PCR product AF was partially digested by *MnlI* and was analyzed by PAGE and Southern hybridization. AC, AD, and AE are derived from AGG sites within the repeat region; and AB is derived from the *MnlI* site 5′ to the repeat. *B*, Autoradiograms of DNA from eight males with gray-zone alleles. The repeat number in each male (lanes 1–8) is shown at the top of the gel. The letters on the left refer to the schematic described above.

Table 3

AGGs in Gray-Zone Families

Family	No. of Triplets	AGG Sites	No. of Pure CGGs	No. of Unstable Meioses	Total No. of Meioses
D33	40	10, 20	20	0	3
F46	40	10, 20	20	0	1
F81	40	10, 19	21	0	1
F532	40	10	30	0	2
F638	40	10, 20	20	0	2
F826	40	11, 20	20	0	2
F1434	40	10, 20, 30	10	0	1
F351	41	9, 19	22	0	1
F71	43	10	33	0	2
F139	43	10, 20	23	0	3
F125	44	10, 18, 29	15	0	2
R127	45	10	35	3	5
F749	47	10, 20	27	0	3
F311	48	10	38	0	1
F1707	50	10	40	0	1
F826	50	10, 19	31	0	1
F363	52	10, 20	32	0	2
F782	53	12	41	1	4
F1111	59	10, 20	39	0	5
F1689	59	10	49	0	2
F1958	60	10	50	0	1
F124	70	None	70	2	2

fewer repeats than were seen in their fathers' somatic tissue. We also have observed sibship clustering in repeat size, independent of the parent's gender and repeat number, and suggest there may be other factors that influence CGG expansion. Our analysis of gray-zone alleles indicates that the presence of long CGG tracts without AGG interruptions neither is universally associated with allele instability nor explains the variation, in stability, between alleles of the same repeat number. The family studies presented here provide further information for understanding the FMR1 CGG repeat and should permit improved risk estimates for genetic counseling.

Acknowledgments

The authors wish to thank the many fragile X families for their support and for donating specimens for these studies. We also thank the health professionals who have referred families to us. We thank Dr. Carl Dobkin for helpful discussion. This work was supported in part by the New York State Office of Mental Retardation and Developmental Disabilities and in part by NIH grants HD29407 (to W.T.B.) and MCJ360587 (to Dr. Edmund C. Jenkins).

References

Ashley AE, Sherman SL (1995) Population dynamics of a meiotic/mitotic expansion model for the fragile X syndrome. Am J Hum Genet 57:1414–1425

Ashley CT, Jrilkinson KD, Reines D, Warren ST (1993) FMR1 protein: conserved RNP family domains and selective binding. Science 262:563–565

Brown WT, Houck GE Jr, Ding X, Zhong N, Nolin S, Glicksman A, Dobkin C, et al (1996*a*) Reverse mutations in the fragile X syndrome. Am J Med Genet 64:287–292

Brown WT, Houck GE Jr, Jeziorowska A, Levinson FN, Ding X, Dobkin C, Zhong N, et al (1993) Rapid fragile X carrier screening and prenatal diagnosis by a non-radioactive PCR test. JAMA 270:1569–1575

Brown WT, Jenkins EC (1992) The fragile X syndrome. In: Friedmann T (ed) Molecular genetic medicine, Academic Press, New York, pp 39–66

Brown WT, Nolin S, Houck G Jr, Ding X, Glicksman A, Li S, Stark-Houck S, et al (1996*b*) Prenatal diagnosis and carrier screening for fragile X by PCR. Am J Med Genet 64:191–195

DeBoulle K, Verkerk AJMH, Reyniers E, Vits L, Hendrickx J, Van Roy B, Van Den Bos F, et al (1993) A point mutation in the FMR-1 gene associated with fragile X mental retardation. Nat Genet 3:31–35

Eichler EE, Holden JJA, Popovich BW, Reiss AL, Snow K, Thibodeau SN, Richards CS, et al (1994) Length of uninterrupted CGG repeats determines instability in the FMR1 gene. Nat Genet 8:88–94

Eichler EE, Macpherson JN, Murray A, Jacobs PA, Chakravarti A, Nelson DL (1996) Haplotype and interspersion analysis of the FMR1 CGG repeat identifies two different mutational pathways for the origin of the fragile X syndrome. Hum Mol Genet 5:319–330

Fisch GS, Snow K, Thibodeau SN, Chalifaux M, Holden JJA, Nelson DL, Howard-Peebles PN, et al (1995) The fragile X premutation in carriers and its effect on mutation size in offspring. Am J Hum Genet 56:1147–1155

Fu Y-H, Kuhl DPA, Pizzuti A, Pieretti M, Sutcliffe JS, Richard S, Verkerk AJMH, et al (1991) Variation of the CGG repeat at the fragile X site results in genetic instability: resolution of the Sherman paradox. Cell 67:1047–1058

Gedeon AK, Baker E, Robinson H, Partington MW, Gross B, Mance A, Korn B, et al (1992) Fragile X syndrome without CCG amplification has an FMR1 deletion. Nat Genet 1: 341–344

Heitz D, Devys D, Imbert G, Kretz C, Mandel J (1992) Inheritance of the fragile X syndrome: size of the fragile X premutation is a major determinant to full mutation. J Med Genet 29:794–801

Hirst MC, Grewal PK, Davies KE (1994) Precursor arrays for triplet repeat expansion at the fragile X locus. Hum Mol Genet 3:1553–1560

Hirst M, Grewal P, Flannery A, Slatter R, Maher E, Barton D, Fryns J-P, et al (1995) Two new cases of FMR1 deletion associated with mental impairment. Am J Hum Genet 56: 67–74

Koch MC, Grimm T, Harley HG, Harper PS (1991) Genetic risks for children of women with myotonic dystrophy. Am J Hum Genet 48:1084–1091

Kunst CB, Warren ST (1994) Cryptic and polar variation of the fragile X repeat could result in predisposing normal alleles. Cell 77:853–861

Loesch DZ, Huggins R, Petrovic V, Slater H (1995) Expansion of the CGG repeat in fragile X in the FMR1 gene depends on the sex of the offspring. Am J Hum Genet 57:1408–1413

Lugenbeel KA, Peier AM, Carson NL, Chudley AE, Nelson DL (1995) Intragenic loss of function mutations demonstrate the primary role of FMR1 in fragile X syndrome. Nat Genet 10:483–485

Macpherson JN, Curtis G, Crolla JA, Dennis N, Migeon B, Grewal PK, Hirst MC (1995) Unusual $(CGG)_n$ expansion and recombination in a family with fragile X and DiGeorge syndrome. J Med Genet 32:236–239

Meijer H, de Graaff E, Merckx DML, Jongbloed JE, de Die-Smulders CEM, Engelen JJM, Fryns J-P, et al (1994) A deletion of 1.6 kb proximal to the CGG repeat of the FMR1 gene causes the clinical phenotype of the fragile X syndrome. Hum Mol Genet 3:615–620

Pieretti M, Zhang F, Fu Y-H, Warren ST, Oostra BA, Caskey CT, Nelson DL (1991) Absence of expression of the FMR-1 gene in fragile X syndrome. Cell 66:817–822

Reiss AL, Kazazian HH Jr, Krebs CM, McAughan A, Boehm, Abrams MT, Nelson D (1994) Frequency and stability of the fragile X premutation. Hum Mol Genet 3:393–398

Reyniers E, Vits L, De Boulle K, Van Roy B, Van Velsen D, de Graaff E, Verkerk AJMH, et al (1993) The full mutation in the FMR-1 gene of male fragile X patients is absent in their sperm. Nat Genet 4:143–146

Richards R, Sutherland GR (1992) Heritable unstable DNA sequences. Nat Genet 1:7–9

Rousseau F, Heitz D, Biancalana V, Blumenfeld S, Kretz C, Boué J, Tommerup N, et al (1991) Direct diagnosis by DNA analysis of the fragile X syndrome of mental retardation. N Engl J Med 325:1673–1681

Rousseau F, Heitz D, Tarleton J, MacPherson J, Malmgren H, Dahl N, Barnicoat A, et al (1994) Higher rate of transition from fragile X premutations into full mutation in males than in females suggests post-conceptional expansion of the CGG repeats. Am J Hum Genet Suppl 55:A240

Sherman SL, Jacobs PA, Morton NE, Froster-Iskenius U, Howard-Peebles PN, Nielsen KB, Partington MW, et al (1985) Further segregation analysis of the fragile X syndrome with special reference to premutation males. Hum Genet 69:289–299

Sherman SL, Morton NE, Jacobs PA, Turner G (1984) The marker (X) syndrome: a cytogenetic and genetic analysis. Ann Hum Genet 48:21–37

Snow K, Doud LK, Hagerman R, Pergolizzi RG, Erster SH, Thibodeau SN (1993) Analysis of a CGG sequence at the FMR-1 locus in fragile X families and in the general population. Am J Hum Genet 53:1217–1228

Snow K, Tester DJ, Kruckeberg KE, Schaid DJ, Thibodeau SN (1994) Sequence analysis of the fragile X trinucleotide repeat: implications for the origin of the fragile X mutation. Hum Mol Genet 3:1543–1551

Telenius H, Kremer HPH, Theilmann J, Andrew SE, Almqvist E, Anvret M, Greenberg C, et al (1993) Molecular analysis of juvenile Huntington disease: the major influence on $(CAG)_n$ repeat length is the sex of the affected parent. Hum Mol Genet 2:1535–1540

Tsilfidis C, MacKenzie AE, Mettler G, Barceló J, Korneluk (1992) Correlation between CTG trinucleotide repeat length and frequency of severe congenital myotonic dystrophy. Nat Genet 1:192–195

Väisänen ML, Kähkönen M, Leisti J (1994) Diagnosis of fragile X syndrome by direct mutation analysis. Hum Genet 90: 143–147

Verkerk AJM, Pieretti M, Sutcliffe JS, Fu Y-H, Kuhl DPA, Pizzuti A, Reiner, et al (1991) Identification of a gene (FMR-1) containing a CGG repeat coincident with a breakpoint cluster region exhibiting length variation in fragile X syndrome. Cell 65:905–914

Wöhrle D, Kotzot D, Hirst MC, Manca A, Korn B, Schmidt A, Barbi G, et al (1992) A microdeletion of less than 250 kb, including the proximal part of the FMR-1 gene and the fragile-X site, in a male with the clinical phenotype of fragile-X syndrome. Am J Hum Genet 51:299–306

Yu S, Mulley J, Loesch D, Turner G, Donnelly A, Gedeon A, Hillen D, et al (1992) Fragile-X syndrome: unique genetics of the heritable unstable element. Am J Hum Genet 50:968–980

Zhong N, Yang W, Dobkin C, Brown WT (1995) Fragile X gene instability: anchoring AGGs and linked microsatellites. Am J Hum Genet 57:351–361