[9] Jones, E. E., and H. P. Broquist, *J. Biol. Chem.*, **240**, 2531 (1965).
[10] Kabara, J. J., N. R. Spafford, M. A. McKendry, and N. L. Freeman, in *Advances in Tracer Methodology*, ed. S. Rothchild (New York: Plenum Press, 1963), vol. 1, p. 76.
[11] Strassman, M., and S. Weinhouse, *J. Am. Chem. Soc.*, **75**, 1680 (1953).
[12] Petrowitz, H. J., and G. Pastuska, *J. Chromatog.*, **7**, 128 (1962).
[13] Kao, K.-Y. T., and R. J. Boucek, *Proc. Soc. Exptl. Biol. Med.*, **98**, 530 (1958).
[14] Fitch, S. M., M. L. R. Harkness, and R. D. Harkness, *Nature*, **176**, 163 (1955).
[15] Spackman, D. H., W. H. Stein, and S. Moore, *Anal. Chem.*, **30**, 1190 (1958).
[16] Fujimoto, D., and N. Tamiya, *Biochem. Biophys. Res. Commun.*, **10**, 498 (1963).
[17] Fujimoto, D., and N. Tamiya, *Biochem. J.*, **84**, 333 (1962).
[18] Prockop, D., A. Kaplan, and S. Udenfriend, *Biochem. Biophys. Res. Commun.*, **9**, 162 (1962)

---

*ON THE LIGAND FIELD OF IRON IN FERREDOXIN FROM SPINACH CHLOROPLASTS AND RELATED NONHEME IRON ENZYMES**

BY HANS BRINTZINGER, GRAHAM PALMER, AND RICHARD H. SANDS

BIOPHYSICS RESEARCH DIVISION, INSTITUTE OF SCIENCE AND TECHNOLOGY, UNIVERSITY OF MICHIGAN, ANN ARBOR

Communicated by J. L. Oncley, December 27, 1965

The suspected structural relationship between the ferredoxin group of enzymes, recently found to participate in a variety of biological electron transfer reactions,[1] and other nonheme iron enzymes has acquired substantial support by our recent finding[2] that the ferredoxin isolated from spinach chloroplasts exhibits under reducing conditions an EPR spectrum of the type now well known for other nonheme iron enzymes by the work of Beinert and co-workers.[3] More recently, such an EPR spectrum has also been obtained with ferredoxin from *Clostridium pasteurianum*.[4] In the EPR spectra of these ferredoxins, as in those of the other nonheme iron enzymes that have been reported so far, two of the absorption extrema are observed at g-values lower than 2 and one is found just above the free electron value, g_e (see Table 1). EPR spectra of this kind are very atypical for iron complexes usually encountered and must reflect a highly specific structural arrangement of ligand groups around the iron atoms in these proteins. The purpose of this communication is to substantiate a particular model for the environment of iron in these protein complexes which is in accord with their spectral properties.

Construction of an Orbital Scheme.—The view is taken that the deviations of observed g-values from the free electron value, g_e, indicate that an unpaired electron is in an orbital to which another state, related to it by rotation around a coordinate axis, can be admixed by spin orbit coupling, λ. (It has also been pointed out by Blumberg and Peisach (in ref. 1, p. 101) that exchange interaction of diamagnetic Fe(II) complexes with radicals can be expected to give rise to g-values below g_e via interaction with an excited triplet state of the metal ion.) With this in mind, the observation of *two* absorption extrema below g_e, as in the EPR spectra of the ferredoxins, can only arise from a situation where either one or two electrons or holes are centered around the iron atom in a near-degenerate set of *three* molecular orbitals involving the metal d_{xy}, d_{xz}, and d_{yz}, or p_x, p_y, and p_z orbitals. In either case the unpaired electron(s) would have a partial freedom for precession around two of the

TABLE 1

PROPERTIES OF SOME NONHEME, NONFLAVIN IRON ENZYMES

	Mol wt	Iron per molecule	Labile sulfide per molecule	Redox-potential	EPR absorp. g-values	Optical Absorptions λ	ϵ per iron
"Photosynthetic pyridine nucleotide reductase," spinach chloroplast ferredoxin[2, 22–25]	13,000	2	2	−0.432	1.89	325	6,950
					1.96	420	5,160
					2.04	465	4,650
Clostridium pasteurianum ferredoxin[4, 24, 26]	6,000	7	6–7	−0.42	1.89	315	sh
	...	...	...	...	1.96	390	2,920
	...	...	...	...	2.01	...	...
Nitrogen-fixing extracts from *Clostridium pasteurianum*[27, 28]	24,200	1.4	1.65	...	1.93	333	8,400
	...	...	...	...	1.95	425	4,300
	...	...	...	...	2.00	463	4,050
	...	...	...	...	...	550	2,500
Clostridium pasteurianum "rubredoxin"[29]	6,000–7,000	1	0	−0.06	...	350	11,800
	...	...	...	...	...	380	...
	...	...	...	...	...	490	8,850
	...	...	...	...	...	550	sh
Chromatium ferredoxin[30, 31]	9,240	3–4	3–4	−0.49	...	300	sh
	...	...	...	...	...	388	5,000–7,000
Chromatium "high potential protein"[30]	9,284	3–4	...	+0.35	...	375	4,000–5,000
Nostoc ferredoxin[31]	...	...	...	−0.405	...	331	...
	...	...	...	...	...	423	...
	...	...	...	...	...	470	...
Chlorella "red enzyme"[32]	...	...	...	...	...	330	7,370
	...	...	...	...	...	420	5,290
	...	...	...	...	...	465	4,890
Nonheme iron protein from coenzyme Q-cytochrome *c* reductase complex of beef heart mitochondria[33–35]	26,000	2	2	+0.22	1.8	315	sh
	...	...	...	...	1.9	464	6,000
	...	...	...	...	2.02	550	sh
"TPNH-flavoprotein-cytochrome P_{450} reductase" from beef adrenal cortex[36, 37]	22,000	2	2	+0.15	1.94	320	...
	...	...	...	...	1.94	414	4,600
	...	...	...	...	2.02	455	3,950
Nonheme iron protein from *Azotobacter vinelandii*[38]	30,000	Probably 1	*ca.* 0.5	...	1.93	331	8,500
	...	...	...	...	1.94	420	5,050
	...	...	...	...	2.00	458	5,000
						545	2,560

coordinate axes and could give rise to an EPR spectrum with two g-values below g_e. It is clear that electron configurations of this type arise if Fe(III) or Fe(II) are placed in a strong ligand field of essentially tetrahedral symmetry. (See *Note added in proof.*)

Fe(III) is known to form complexes of coordination number 4 and essentially tetrahedral symmetry with sulfide and mercaptide ligands,[5, 6] and a structure of this kind has indeed been proposed already by Blomstrom *et al.*[7] to account for the magnetic properties and the Mössbauer spectrum of ferredoxin from *Clostridium pasteurianum*, and has been found by Tanaka *et al.* to be in accord with the spacing of cysteine residues in the amino acid sequence of this protein.[8, 9] This structure consists of bridged tetrahedra with alternating sulfide and cysteine mercaptide ligands. Recent X-ray diffraction studies[10] have shown, however, that the protein does not contain a *linear* array of seven iron atoms, as originally proposed by Blomstrom *et al.*[7]

An orbital diagram of a Fe(III) complex with four mercaptide or sulfide ligands, which accounts for the optical and the EPR properties of ferredoxin from spinach chloroplasts, is given in Figure 1. The labeling of the orbitals in Figure 1 as E and T is used to indicate their relation to the original level subgroups prior to the removal of degeneracies by distortion of the tetrahedral structure. In constructing the orbital scheme the following points were observed:

(1) From the electronegativities of Fe(III) and of sulfur ligands, e.g., in Jørgensen's optical electronegativity scale,[11] it is clear that the coordinative σ-bonds will be close to complete covalency. The coefficients $\alpha_{(xy)}$, $\alpha_{(xz)}$ and $\alpha_{(yz)}$, denoting the contributions from the three metal d-orbitals to the three respective molecular orbitals can therefore be assumed to be of the order of $1/\sqrt{2}$, i.e., $\alpha^2 \simeq 0.5$. The unpaired electron will then be spread out onto the sulfur ligand atoms to an appreciable extent.

(2) Second-order perturbation theory predicts[12] that g_x and g_y will be shifted below g_e by $2\lambda\alpha_{(xy)}\alpha_{(xz)}/\Delta E_{(xz)-(xy)}$ and $2\lambda\alpha_{(xy)}\alpha_{(yz)}/\Delta E_{(yz)-(xy)}$, respectively. From the observed values $g_e - g_x = 0.11$ and $g_e - g_y = 0.04$[2] the energy differences among the orbitals of the T^* set given in Figure 1 have been calculated; for λ a value of 410 cm^{-1} has been used.[13]

(3) The optical absorptions in the visible and in the near ultraviolet which are characteristic for the color of nonheme iron proteins (see Table 1) correspond to transitions from the levels of the E subgroup to those of the T^* subgroup. The high extinction coefficients of these transitions can only be reconciled with an extensive charge transfer character of the corresponding transitions, such as is characteristic for $E \rightarrow T_2^*$ transitions in tetrahedral symmetry.[14, 15] These absorptions thus give 20,000–30,000 cm^{-1} as a rough measure for the energetic separation between the levels of the E and of the T^* subgroup.

(4) More specific assignments of the absorption bands to the individual components of the $E \rightarrow T_2^*$ transitions can only be made tentatively. Since the $E_{x^2-y^2} \rightarrow T_{xy}^*$ transition can be expected to be the component with the lowest extinction coefficient,[14, 15] it seems reasonable to assume that it corresponds to the rather weak absorption at *ca.* 18,000 cm^{-1} (560 mμ), which is observed as an absorption tail only in many of the nonheme iron proteins; absorptions around 22,000 cm^{-1} (450 mμ) would then arise from the $E_{z^2} \rightarrow T_{xy}^*$ transition, and the rest of the transitions

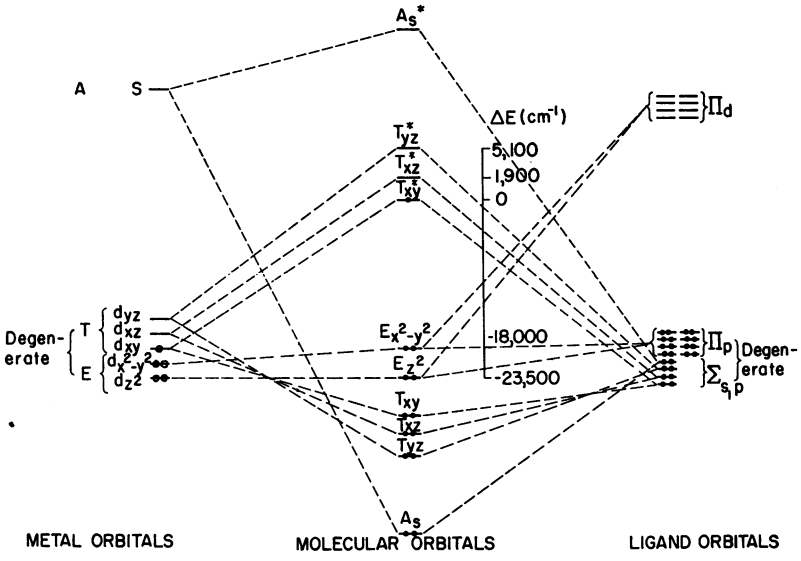

FIG. 1.—Molecular orbital scheme of a tetrahedral iron complex, constructed from the optical and EPR properties of spinach chloroplast ferredoxin. π-Type interactions of the E orbitals with p electrons and empty d orbitals of the ligands is only schematically indicated.

should be found between 22,000 and 33,000 cm^{-1}, where a broad band or, in some enzymes, a continuous slope envelops several absorptions, as shown by the multiple changes of rotatory dispersion in this region.[16]

(5) Shifts of the third g-value, g_z, to values higher than g_e are connected with the energy difference between $E_{x^2-y^2}$ and T_{xy}^*: $g_z - g_e = 8\lambda\alpha_{(x^2-y^2)}\alpha_{(xy)}/\Delta E_{(xy)-(x^2-y^2)}$.[12] From $g_z - g_e = 0.045$ observed for spinach ferredoxin $\Delta E_{(xy)-(x^2-y^2)} = 36{,}000\ cm^{-1}$ is calculated if again $\alpha_{(x^2-y^2)}\alpha_{(xy)} \simeq 0.5$ is assumed. This ΔE is somewhat too high in comparison to the optically obtained energy differences between the E- and the T-type orbitals. In other nonheme iron enzymes g_z is still closer to g_e; an even greater energy separation would be required here to account for the attenuation of the orbital contribution to g_z. However, this disagreement is not to be regarded as serious; a number of mechanisms such as admixture of metal p states to the T_2^* levels, spin-orbit coupling in the states centered on the sulfur ligand atoms, and coupling of orbital momenta of adjacent iron atoms, while being of little influence on the shifts of g_x and g_y, might all contribute to a partial abolishment of the g_z shift.

Discussion.—Though coordinative interaction of Fe(III) with mercaptide or sulfide ligands is a convenient starting point for the construction of the orbital scheme given above, the highly delocalized orbitals make the assignment of valence states in the complex completely arbitrary. Interaction of a sulfide radical with Fe(II) in a strong tetrahedral field would thus be equivalent to the situation discussed above. Furthermore, it has been made clear by Hemmerich[17] that two sulfide ligands, together with an iron central atom, form a three-center bonding array in which also the sulfur ligand atoms may be considered as being bound to each other. Fe(III) in an environment of four sulfide ligands (I) may therefore equally well be regarded as a complex of Fe(I) with one disulfide and two sulfide

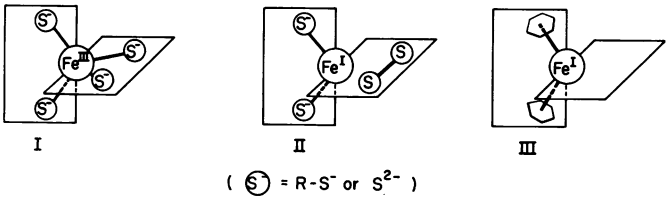

ligands (II). A structurally analogous complex of Fe(I) with two aromatic ring ligands (III), which furnish ligand orbitals of the same symmetry as sulfides for the formation of molecular orbitals, has indeed recently been found in this laboratory to exhibit an EPR spectrum quite similar to that of spinach ferredoxin (Fig. 2).[18] A similar ambiguity concerning the valence state of the iron central atom holds also for $[Fe(CN)_5NO]^{3-}$, another iron complex, in which an EPR spectrum with a g-value below 2 has been observed.[19] In this complex, however, only one of the g-values is found below g_e. From the orbital diagram given for this complex,[19] it is clear that this is a necessary consequence of the fact that NO is placed here on a coordinate axis; the unpaired electron is taken up by a doubly degenerate state and can therefore acquire a residual orbital momentum around only one of the axes. This case is another example of iron in a distorted octahedral ligand field which fails to meet the stringent requirements for the explanation of the *two* g-values below g_e in ferredoxins and related nonheme iron enzymes.

The experimental fact that EPR spectra of nonheme iron enzymes are observed only if the enzyme is in its reduced state would be easy to explain if the two iron sites in spinach ferredoxin were interacting: the oxidized state of the enzyme could then, for instance, be envisaged by the chemically indistinguishable forms IV and V. Here, exchange interaction between the two tetrahedra would indeed be expected to lead either to diamagnetism or to extreme line broadening and thereby to the lack of observable EPR spectra. In the reduced state such a relaxation process would be abolished, either by diamagnetism of the Fe(II) entity in forms VI or VII, or by some spatial rearrangements connected with the reduction step. These formulations would be consistent with the experimental observations. In spinach ferredoxin, for instance,

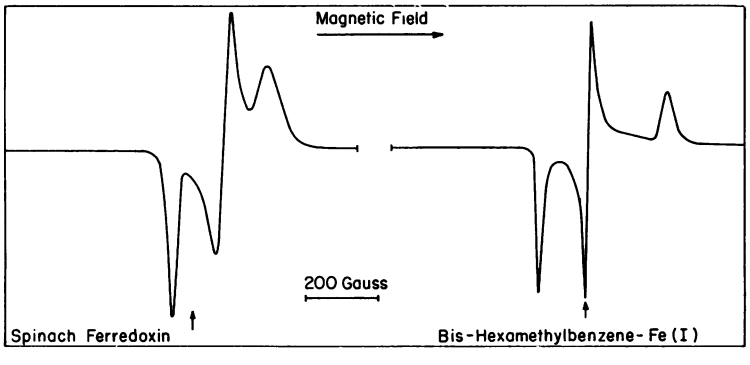

FIG. 2.—EPR spectra of reduced spinach chloroplast ferredoxin (*left*) and bis-Hexamethylbenzene-Fe(I) (*right*). The spectra are recorded on a Varian V-4502 EPR spectrometer using 100 kc/sec field modulation. Microwave frequency, 9.235 Gc; temperature *ca.* 40°K. Arrows indicate the position of $g = 2$; g-values for spinach ferredoxin see Table 1; g-values for bis-Hexamethylbenzene-Fe(I): $g_x = 1.86_5$ (*upper right*), $g_y = 1.99_6$ (*middle*), $g_z = 2.08_6$ (*lower left*).

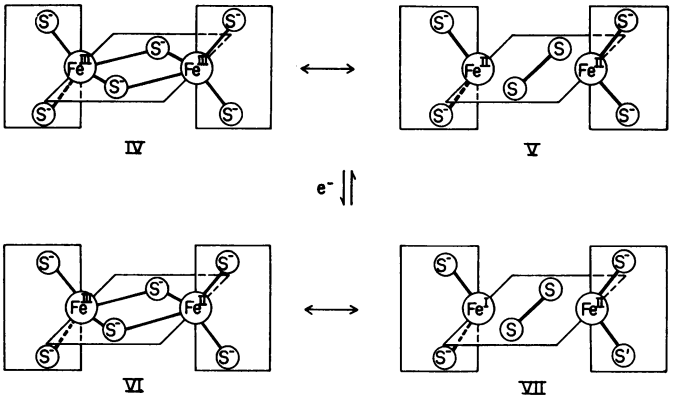

just one half of the absorbance in the visible region which is typical for the oxidized form of the enzyme is abolished on reduction by either illuminated chloroplasts or dithionite.[20] The fact that one tervalent and one bivalent iron are released from the reduced enzyme by mercurials, whereas both irons are set free in the tervalent state from the oxidized enzyme,[20] would also substantiate this interpretation, especially since there are no additional redox species present in spinach ferredoxin. In other nonheme iron enzymes, too, there is considerable residual color left in the reduced state, which indicates resistance of part of the iron atoms to reduction. The implication that only one out of a number of iron atoms causes the EPR absorption in the reduced nonheme iron enzymes would also furnish the most natural explanation for the observation that double integration of the EPR spectra consistently leads to a lower number of unpaired spins per molecule of enzyme than there are chemically detectable iron atoms.[3, 4] However, even if the iron atoms are nonvicinal, the orbital scheme given above would still be a possible explanation of the nonheme iron EPR spectra, though the explanation for the appearance of these spectra in the reduced state would have to be different (e.g., VIII $\xrightarrow{e^-}$ II, I). This would then of necessity imply that the two iron sites are nonequivalent in order to account for the uptake of only one electron by spinach ferredoxin. In the clostridial ferredoxins the situation is probably more complicated: here EPR spectra appear to be superpositions of several different spectra.[4] Rotatory dispersions in bacterial ferredoxins have also been reported recently to be different from those of plant ferredoxins.[21] The final decision, whether the iron-sites in the enzyme are vicinal or nonvicinal, would appear to have to come from the crystal structure determination of these enzymes. However, it would be valuable in this respect to investigate the EPR behavior of nonheme iron enzymes in which only one iron atom per enzyme molecule were present. If structures like I and II are pertinent for the oxidized enzyme, we would expect that this oxidized form shows an EPR spectrum of the type discussed above; if, instead, the *reduced* form, which here should be

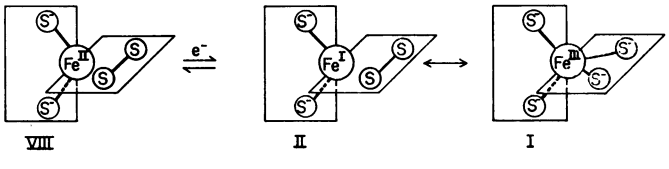

completely void of absorbance in the visible, would show the nonheme iron type EPR spectrum, then this would be incompatible with this interpretation. Another most valuable piece of information would be the observation of a resolved hyperfine splitting or an electron-nuclear double resonance study of the interaction of the unpaired electron with Fe^{57} nuclei in the ferredoxin: If structures VI and VII are correct, the electron should be found to interact with *both* of the Fe^{57} nuclei. If such experimental data and the interpretation of other spectral properties, such as the circular dichroism of the absorption bands in the visible, should turn out to support further the structural assignment of the environment of iron in these protein complexes which we have given in this communication, it would seem warranted to refine the theoretical model, especially by taking into account the effect of metal-metal interactions in iron pairs or clusters on g-values, relaxation mechanisms, and redox potentials.

Note added in proof: It has been pointed out to us by Dr. R. J. P. Williams, and we agree by independent calculations, that it is also possible to obtain these g-values using a hole in these states in distorted octahedral fields with some delocalization; see, for example, Stevens, K. W. H., *Proc. Royal Soc. (London)*, **A219**, 542 (1953). In order to obtain the g-values observed, we find it necessary for the energy separations between the components of the T states, resulting from the distortions of the octahedral ligand field, to be small compared with the spin orbit coupling. Whereas this would seem plausible for the cases of $4d^5$ and $5d^5$, it would not appear to be so likely for $3d^5$; nevertheless, this is one more of the possible models which could account for the unique EPR spectrum.

The authors are grateful to Drs. Vincent Massey and Peter Hemmerich for valuable discussions of questions dealt with in this communication.

* Work supported in part by a grant (GM 12176) from the National Institutes of Health, U.S. Public Health Service.

[1] San Pietro, A., ed., *Non-Heme Iron Proteins: Role in Energy Conversion* (Yellow Springs, Ohio: Antioch Press, 1965).

[2] Palmer, G., and R. H. Sands, *J. Biol. Chem.*, in press.

[3] Beinert, H. in *I.U.B. Symposium on Flavins and Flavoproteins*, ed. E. C. Slater (New York: Elsevier, 1965).

[4] Palmer, G., R. H. Sands, and L. Mortensen, to be published.

[5] Boon, J. W., and C. H. MacGillavry, *Rec. Trav. Chim.*, **61**, 910 (1942).

[6] Thomas, J. T., J. H. Robertson, and E. G. Cox, *Acta Cryst.*, **11**, 599 (1958).

[7] Blomstrom, D. C., E. Knight, W. D. Philips, and J. F. Weicher, these PROCEEDINGS, **51**, 1085 (1964).

[8] Tanaka, M., M. A. Benson, H. F. Mower, and K. T. Yasunobu, in *Non-Heme Iron Proteins: Role in Energy Conversion*, ed. A. San Pietro (Yellow Springs, Ohio: Antioch Press, 1965), p. 221.

[9] Tanaka, M., T. Nakashima, A. M. Benson, H. F. Mower, and K. T. Yasunobu, *Biochem. Biophys. Res. Commun.*, **16**, 422 (1964).

[10] Jensen, L. H., and L. C. Sieker, *Science*, **150**, 376 (1965).

[11] Jørgensen, C. K., in *Rept. VIII Intern. Conf. Coord. Chem.*, ed. V. Gutmann (Vienna, 1964), p. 67.

[12] Pake, G. E., *Paramagnetic Resonance* (New York: W. A. Benjamin Inc., 1962), pp. 59–62.

[13] Griffith, J. S., *The Theory of Transition-Metal Ions* (Cambridge: The University Press, 1961), p. 437.

[14] Ballhausen, C. J., and A. D. Liehr, *J. Mol. Spectr.*, **2**, 342 (1958); **4**, 190 (1960).

[15] Ballhausen, C. J., *Ligand Field Theory* (New York: McGraw-Hill Book Co. Inc., 1962), pp. 170–174.

[16] Vallee, B. L., and D. D. Ulmer, in *Non-Heme Iron Proteins: Role in Energy Conversion*, ed. A. San Pietro (Yellow Springs, Ohio: Antioch Press, 1965), p. 43.

[17] Hemmerich, P., in *I.U.B. Symposium on Flavins and Flavoproteins*, ed. E. C. Slater (New York: Elsevier, 1965).

[18] Brintzinger, H., G. Palmer, and R. H. Sands, submitted to *J. Am. Chem. Soc.*

[19] Beinert, H., D. V. Dervartanian, P. Hemmerich, C. Veeger, and J. D. W. Van Voorst, *Biochim. Biophys. Acta*, **96**, 530 (1965).

[20] Fry, K. T., R. A. Lazzarini, and A. San Pietro, these PROCEEDINGS, **50**, 652 (1963).

[21] Gillard, R. D., E. D. McKenzie, R. Mason, S. G. Mayhew, J. L. Peel, and J. E. Stangroom, *Nature*, **208**, 769 (1965).

[22] Whatley, F. R., K. Tagawa, and D. I. Arnon, these PROCEEDINGS, **49**, 266 (1963).

[23] Fry, K. T., and A. San Pietro, *Biochem. Biophys. Res. Commun.*, **9**, 218 (1962).

[24] Tagawa, K., and D. I. Arnon, *Nature*, **195**, 537 (1962).

[25] Davenport, H. E., in *Non-Heme Iron Proteins: Role in Energy Conversion*, ed. A. San Pietro (Yellow Springs, Ohio: Antioch Press, 1965), p. 115.

[26] Levenberg, W., B. B. Buchanan, and J. C. Rabinowitz, *J. Biol. Chem.*, **238**, 3899 (1963).

[27] Hardy, R. W. F., E. Knight, Jr., C. C. McDonald, and A. J. D'Eustachio, in *Non-Heme Iron Proteins: Role in Energy Conversion*, ed. A. San Pietro (Yellow Springs, Ohio: Antioch Press, 1965), p. 275.

[28] Mortensen, L., personal communication.

[29] Levenberg, W., and B. E. Sobel, these PROCEEDINGS, **54**, 193 (1965).

[30] Bearden, A. J., T. H. Moss, R. G. Bartsch, and M. A. Cusanovich, in *Non-Heme Iron Proteins: Role in Energy Conversion*, ed. A. San Pietro (Yellow Springs, Ohio: Antioch Press, 1965), p. 87.

[31] Arnon, D. I., in *Non-Heme Iron Proteins: Role in Energy Conversion*, ed. A. San Pietro (Yellow Springs, Ohio: Antioch Press, 1965), p. 137.

[32] Gewitz, H. S., and W. Voelker, *Hoppe-Seylers Z. Physiol. Chem.*, **330**, 124 (1962).

[33] Rieske, J. S., in *Non-Heme Iron Proteins: Role in Energy Conversion*, ed. A. San Pietro (Yellow Springs, Ohio: Antioch Press, 1965), p. 461.

[34] Rieske, J. S., W. S. Zaugg, and R. E. Hansen, *J. Biol. Chem.*, **239**, 3023 (1964).

[35] Rieske, J. S., D. H. McLennan, and R. Coleman, *Biochem. Biophys. Res. Commun.*, **15**, 338 (1964).

[36] Omura, T., E. Sanders, D. Y. Cooper, O. Rosenthal, and R. W. Estabrook, in *Non-Heme Iron Proteins: Role in Energy Conversion*, ed. A. San Pietro (Yellow Springs, Ohio: Antioch Press, 1965), p. 401.

[37] Palmer, G., R. H. Sands, and R. W. Estabrook, unpublished results.

[38] Shetna, Y. I., P. W. Wilson, and H. Beinert, *Biochim. Biophys. Acta*, in press.

---

*AMINO ACID PRODUCTION BY A MITOCHONDRIAL FRACTION OF NEUROSPORA CRASSA**

BY J. A. KINSEY† AND R. P. WAGNER‡

GENETICS FOUNDATION OF THE DEPARTMENT OF ZOOLOGY, UNIVERSITY OF TEXAS, AUSTIN

Communicated by Wilson S. Stone, December 1, 1965

Recent work in this laboratory has demonstrated that the enzymes responsible for the synthesis of isoleucine and valine in *Neurospora* from at least pyruvate and α-ketobutyrate are located in the particulate fraction of the cell. This fraction is made up largely of mitochondria.[1–3] We were curious to know whether this particulate nature was unique to the isoleucine-valine enzymes, or whether it might be shared with other amino acid-synthesizing enzymes. We started by testing the leucine-synthesizing system because of its known relationship to the valine pathway. The experiments described below demonstrate that crude mitochondrial preparations (CMP) from *Neurospora* are capable of producing leucine and a number of other amino acids in addition to isoleucine and valine.