LETTER TO JMG

Penetrance of adrenocortical tumours associated with the germline *TP53* R337H mutation

B C Figueiredo, R Sandrini, G P Zambetti, R M Pereira, C Cheng, W Liu, L Lacerda, M A Pianovski, E Michalkiewicz, J Jenkins, C Rodriguez-Galindo, M J Mastellaro, S Vianna, F Watanabe, F Sandrini, S B I Arram, P Boffetta, R C Ribeiro

J Med Genet 2006;**43**:91–96. doi: 10.1136/jmg.2004.030551

Background: An inherited germline *P53* mutation has been identified in cases of childhood adrenocortical carcinoma (ACT), a neoplasm with a high incidence in southern Brazil. The penetrance of ACT in carriers of the point mutation, which encodes an arginine-to-histidine substitution at codon 337 of *TP53* (R337H), has not been determined.
Objective: To investigate the penetrance of childhood ACT in carriers of the R337H *TP53* mutation.
Methods: The family histories of 30 kindreds of 41 southern Brazilian children with ACT were obtained. A PCR based assay was used to detect this *P53* mutation in a large number of relatives of children with ACT. In all, 927 individuals were tested for the mutation, 232 from the non-carrier and 695 (including the 40 probands) from the carrier parental lines.
Results: 40 children with ACT carried the *TP53* R337H mutation; the remaining child with ACT was not tested. There was no evidence of Li-Fraumeni syndrome in any of the kindreds; however, seven met the criteria for Li-Fraumeni-like syndrome. The carrier parental line was identified in each kindred. Of the 695 individuals tested in the carrier parental line, 240 (34.5%) were positive for the mutation, while none of the 232 individuals in the other parental line carried the mutation. The penetrance of ACT was 9.9% (95% confidence interval, 8.7% to 11.1%).
Conclusions: The *TP53* R337H mutation dramatically increases predisposition to childhood ACT but not to other cancers, and explains the increased frequency of ACT observed in this geographic region.

In southern Brazil, the annual incidence of childhood adrenocortical tumour (ACT) is unusually high, ranging from 3.4 to 4.2 cases per million children-year,[1] compared with a worldwide incidence at ages 0–14 years of only 0.3 per million children-year.[2] Germline mutations in the DNA binding domain of the *TP53* gene are associated with Li-Fraumeni (LF) syndrome, which is characterised by an increased risk of cancer, including paediatric ACT.[3 4] Notably, in carriers of these *TP53* mutations, ACT accounts for 3% of all tumours occurring at any age and for 10% of childhood tumours. Thus *TP53* mutations appear to increase the predisposition of children to ACT. Although childhood ACT is frequently observed in families that have susceptibility to cancer, relatives of southern Brazilian children with ACT do not appear to have the cancer profiles of LF[3] or LF-like syndrome,[5] as has been reported previously.[1] The Brazilian patients typically carry a unique *TP53* mutation (R337H) in the oligomerisation domain of the protein.[6] The aetiology of this mutation, which appears to be restricted to a specific region of Brazil, remains elusive. However, the loss of heterozygosity with retention of the mutant allele in tumour cells, the accumulation of TP53 protein in the nucleus, and the folding characteristics of the missense protein in vitro[6 7] strongly support the role of the R337H mutation in tumorigenesis.

The R337H mutation, which encodes histidine instead of arginine at codon 337, disrupts a *Hha*I restriction endonuclease site. This genetic alteration allowed the development of a reliable screening method to detect carriers and establish the penetrance of ACT among carriers. Because tumour size is highly predictive of prognosis in children with ACT,[8] close monitoring of children at risk may allow early intervention and improved outcome.

In this study, we sought to answer the following questions: What is the frequency of the R337H *TP53* mutation among relatives of children with ACT? Is there evidence of the de novo emergence of this mutation? Is there any evidence that this *TP53* mutation increases the risk of other cancers? What is the penetrance of childhood ACT in carriers of the R337H *TP53* mutation? What is the cumulative incidence (risk) and age specific risk of childhood ACT among carriers?

METHODS

Subjects and their relatives

Of the 32 girls and nine boys with ACT, 40 were tested and found to carry the R337H *TP53* mutation. The remaining child with ACT was not tested, although her four tested siblings were carriers of the mutation. Among the parents, 21 mothers and 16 fathers were carriers. Parents of one proband were not available for testing. The children were 0.7 to 10.8 years of age at the time of diagnosis (mean (SD), 3.18 (2.43) years; median 2.1 years). Complete pedigrees were constructed for the 30 kindreds with one (22 kindreds) or more (eight kindreds) cases of ACT. Relatives from both parental lines of each proband were invited to participate in the study and were interviewed for history of cancer. In all, 927 individuals were tested for the mutation, 232 from the non-carrier and 695 (including the 40 probands) from the carrier parental lines. On the basis of the pedigree, the number of additional carriers among the untested 281 individuals in the carrier parental line was estimated. The latter individuals were not tested because either they failed to reply or they declined the invitation to participate.

The study was approved by the ethics committee of the Hospital de Clinicas, Federal University of Paraná, the Brazilian national ethics committee, and the institutional review board of St Jude Children's Research Hospital. Written informed consent was obtained from all probands' parents and adult relatives and from the legal guardians of relatives younger than 18 years of age.

Abbreviations: ACT, adrenocortical tumour; LF, Li-Fraumeni syndrome; MLE, maximum likelihood estimator; PBL, peripheral blood lymphocytes

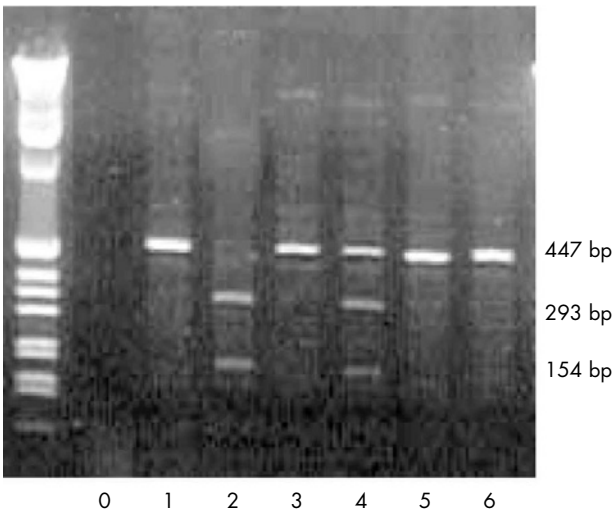

Figure 1 Polymerase chain reaction (PCR) amplified, *Hha*I-restricted DNA from control leucocytes (lane 2), a proband's leucocytes (lane 4), and the same proband's tumour (lane 6). Lane 0 shows a negative control (no DNA). Lanes 1, 3, and 5 are undigested PCR-amplified products from control (1), proband's blood (3), and proband's tumour (5). Lane 2 shows two bands (154 and 293 bp) representing both wild-type p53 alleles. Lane 4 shows 3 bands from a subject heterozygous for the R337H *TP53* allele (*Hha*I cleaves wild-type *P53* but not the R337H mutant). Lane 6 shows a single band from genomic tumour cell DNA that has undergone loss of heterozygosity.

PCR assay

Genomic DNA from peripheral blood lymphocytes (PBL) and tumour cells was isolated and amplified by polymerase chain reaction (PCR) using standard protocols. Specifically, PCR was carried out in a 50 µl PCR buffer containing 2.5 U Taq polymerase (Perkin-Elmer, Norwalk, Connecticut, USA), 100 pmol of forward and reverse primers, 25 nmol each of deoxy-NTPs (Perkin-Elmer), and 100–200 ng genomic DNA. The PCR product corresponding to a 447 base pair (bp) segment of exon 10 was generated using the following primers: 5′-CTG AGG CAC AAG AAT CAC-3′ (forward) and 5′-TCC TAT GGC TTT CCA ACC-3′ (reverse). Samples were denatured at 95℃ for 45 seconds and amplified by 30 cycles (annealing at 62℃ for 45 seconds and primer extension at 72℃ for 45 seconds) using a Perkin-Elmer thermal cycler. The amplified product (20 µl) was digested with *Hha*I, yielding 293 bp and 154 bp fragments only if the R337H point mutation was not present (fig 1). Digestion products were separated by electrophoresis in a 1.8% agarose gel prepared in Tris-borate-EDTA buffer containing ethidium bromide. The results of the PCR analysis were validated by sequencing the entire *TP53* gene (22 patients) or exon 10 of the *TP53* gene (five patients).

Statistical analysis

The maximum likelihood estimation method for pedigree design proposed by Gail *et al*[9] was modified to estimate penetrance. The complex pedigree structures and the number of untested individuals in our dataset made the summation over all possibilities of untested genotypes in Gail's model impractical. However, the pedigree structures allowed us to derive the genotypes of certain untested individuals and simulate the genotypes of the remaining untested individuals in each pedigree. Thus likelihood data for the complete set of subjects (in which genotypes of untested individuals were either derived or simulated) were used to estimate penetrance. The following assumptions were made for deriving and simulating genotypes of untested individuals and for constructing the likelihood function:

- there are no de novo mutations;
- only one proband's parent is a carrier;
- for an untested individual, if one of their parents is a carrier, then the probability is 50% that this individual is a carrier;
- kindreds are independent of each other;
- within kindreds, observed phenotypes are conditionally independent given the individuals' genotypes.

The following rules for deriving the genotypes of certain untested individuals were based on the pedigree structure of each kindred. First, if the proband's parents were untested, then one was designated a carrier and the other a non-carrier; if one was tested, then the genotype of the other was considered opposite to that of the tested individual. Second, with respect to a carrier's parents, set the parent who has parents in the parental carrier line of the pedigree to carrier, and recursively apply this rule to untested individuals in the upper generations. Third, set the other parent in each of these cases to non-carrier status. Penetrance estimators and confidence intervals were obtained by repeatedly simulating the genotypes of the remaining untested individuals

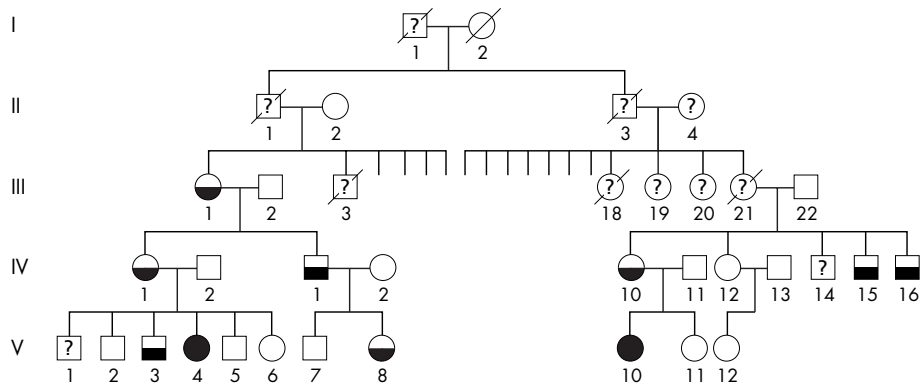

Figure 2 Truncated pedigree of kindred 30 with two probands (V.4 and V.10). Families of individuals III.3 to III.17 are not shown. An individual in the first generation appears to be the oldest carrier of the mutation identified to date (born more than 100 years ago); this carrier was the parent of individuals II.1 and II.3, who were born 84 and 82 years ago, respectively. Square, male; circle, female; empty symbols, non-carriers; filled symbols, probands; half filled symbols, carriers of the R337H *TP53* mutation; question marks within square or circle, untested individuals; diagonal line, deceased individuals; Roman numerals, generation numbers; Arabic numerals, case numbers.

Table 1 Characteristics of 30 kindreds from southern Brazil with one (n = 22) or multiple (n = 8) cases of adrenocortical tumour with the R337H *TP53* mutation

Kindred	Probands; sex and age (y)	Carrier parent	Total No tested	R337H positive relatives ⩽15y	>15 y	Not tested	R337H positive/ probands
1	G/3.7	M	1 7	2	4	6	7/1
2	G/1.7	F	34	3	7	14	11/1
3	G/0.8	M	11	1	2	7	4/1
4	G/3.1	M	30	3	4	2	8/1
5	G/1.8	F	9	0	2	8	3/1
6	G/1.2	M	9	0	2	6	3/1
7	G/1.7	M	31	2	3	21	6/1
8	G/2.1	F	15	0	2	9	3/1
9	G/4.9	M	21	2	5	1	8/1
10	B/1.0	M	13	0	3	18	4/1
11	B/9.7	F	20	3	6	15	10/1
12	G/2.7	M	42	3	10	4	14/1
13	B/7.1	F	29	5	4	0	10/1
14	G/2.9	F	15	1	2	4	4/1
15	B/2.8	M	23	5	4	10	10/1
16	G/1.4	F	14	0	4	14	5/1
17	B/2.1	F	23	1	5	2	7/1
18	G/1.7	M	35	3	8	17	12/1
19	G/1.7	F	21	4	4	21	9/1
20	G/2.2	F	14	NT	1	14	2/1
21	G/2.0	F	10	NT	2	20	3/1
22	G/0.7	M	34	6	3	13	10/1
Total	**17G/5B**	**11M/11F**	**467**	**44**	**87**	**226**	**153/22**
23	B,B/1.5;2.0	F/M	31	2	4	3	8/2
24	B,G/5.0;1.8	M	14	0	4	3	6/2
25*	G,G,G,G,B/ 4.0;3.5;4.7;1.0;0.9	F/F/M/M	73	5	17	15	26/4
26	G,G/4.2;5.7	F/F	19	3	6	1	12/2
27	G,G/1.7;4.8	M	15	1	4	0	7/2
28	G,G/5.0;9.0	M	17	1	2	7	5/2
29	G,G/2.0;3.0	M/M	32	3	8	11	13/2
30	G,G/1.0;10.8	M/M	27	2	6	15	10/2
Total	**14G/4B**	**10M/5F**	**228**	**17**	**52**	**55**	**87/18**

*One proband and her parents from this kindred were not available for genotyping.
B, boy; F, father; G, girl; M, mother; NT, not tested; y, years.

according to the pedigree structure of each kindred and then applying maximum likelihood estimation along with the calculation of confidence intervals in each simulation trial. Genotype simulation was carried out using the following procedure: for each individual of unknown genotype in the generation being considered (generation 2, 3, 4, and/or 5), if one of the parents is a carrier (Aa), then the individual is set to carrier with 50% probability or non-carrier (AA) with 50% probability. If both parents are non-carriers, then the individual is set to non-carrier. This is a first order Markov Chain model[10]; the progeny's genotype distribution given the ancestry genotypes is completely determined by parental genotypes. Finally, the penetrance was estimated by the following procedure: (1) derive the genotypes of certain untested individuals according to the rules described above; (2) simulate the genotypes of the remaining untested individuals according to the first order Markov Chain model; (3) apply maximum likelihood estimation to obtain a maximum likelihood estimator (MLE) and a 95% confidence interval (CI) for the penetrance; (4) repeat steps 2 and 3 1000 times. The final penetrance estimate is the average of the 1000 MLEs. The final 95% confidence interval is obtained by averaging the lower and upper ends of the 1000 confidence intervals.

The cumulative incidence (risk) of ACT among carriers under age 19 years was estimated using the non-parametric cumulative incidence function estimator of Kalbfleisch and Prentice.[11] All carriers (except the probands), including those whose genotypes were derived or simulated, were assumed to have survived ACT-free for at least 19 years and were censored at 19 years of age. The genotypes of untested individuals were derived and simulated. Cumulative risk and risk were calculated during each simulation trial. The final estimates were computed by averaging the estimates across 1000 simulations.

RESULTS

Frequency of *TP53* R337H mutation

In the carrier parental line, 695 individuals were tested. These included 40 children with ACT, 74 of their parents, and 16 grandparents. Fifty per cent of the parents and grandparents carried the R337H *TP53* mutation. Thus there was no evidence of de novo mutation. In one kindred, a member born more than 100 years ago was assumed to have the mutation because both children were carriers (fig 2). Table 1 lists the characteristics of the 30 kindreds.

All together, the R337H *TP53* mutation was found in 240 of the 695 (34.5%) tested individuals in the carrier parental line. In the contralateral parental line, the mutation was not found in any of the 232 individuals tested. The frequency of the mutation was 38% (87/228) in the eight kindreds with more than one case of childhood ACT and 33% (153/467) in kindreds with only one case.

Cancer history in the carrier parental line

Thirty one cases of cancer were reported among first and second degree relatives of the probands. The germline mutation status of three of the four first degree relatives with cancer was known: all were carriers of the R337H *TP53* mutation. The remaining first degree relative with cancer was assumed to have the R337H *TP53* mutation because his sibling was known to be a carrier of the mutation. The

Table 2 History of cancer in 30 kindreds of 41 probands with the R337H *TP53* mutation

Kindred/ syndrome	No interviewed	No of R337H carrier siblings	Other cancers in the lineage carrying the R337H *TP53* mutation			
			Age ⩽45 years		Age >45 years	
			First degree	Second degree*	First degree	Second degree*
1	9	1	–	–	–	–
2/LFL	15	2	–	Liver (41 y), brain (44 y), prostate (45 y)	–	Stomach (54 y)
3	12	1	–	–	–	Stomach (62 y)
4	10	1	–	–	–	Breast (90 y)
5	6	0	–	–	–	Brain (53 y)
6	6	0	–	–	–	Oesophagus (52 y)
7	8	1	–	–	Bone (46 y)†	–
8	6	0	–	–	–	Oesophagus (57 y)
9/LFL	10	1	–	Breast (36 y)	–	Breast (49 y)
10	7	0	–	–	–	–
11	12	1	–	–	–	Lung (57 y)
12	16	1	–	Brain (42 y)	–	–
13	12	1	–	Larynx (41 y)	–	Axilla (52 y)
14	6	1	–	–	–	–
15	12	1	–	–	–	Prostate (54 y)
16	8	0	–	–	–	–
17	10	0	–	–	–	–
18/LFL	14	1	Breast (36 y)†	–		Stomach (56 y)
19	12	0	–	–	–	–
20	5	0	–	–	–	Throat (62 y)
21	6	0	–	–	–	–
22	12	1	–	–	–	Stomach (61 y), liver (63 y)
23/LFL	8	2	–	Liver (45 y)	–	Uterus (61 y), prostate (64 y), lung (48 y)
24	5	3	–	–	–	–
25/LFL	20	13	Brain (7 y)†	–	Unknown abdominal cancer (59 y)‡	–
26/LFL	12	1	–	Breast (39 y)	–	Larynx (50 y)
27	9	0	–	–	–	–
28/LFL	6	1	–	Stomach (41 y)	–	–
29	14	1	–	–	–	–
30	13	1	–	–	–	–
Total: 30	**301**	**36**	**2**	**9**	**2**	**18**

*Mutation status not known.
†R337H carriers (the only cases with other types of tumours tested for R337H): LFL, Li-Fraumeni like syndrome as defined by Birch *et al*, 1994.[5]
‡Assumed genotype.
y, years.

mutation status of the other relatives with cancer was not known. The tumour types included breast (n = 5), stomach (n = 5), brain (n = 4), oesophagus (n = 3), prostate gland (n = 3), throat (n = 3), lung (n = 2), liver (n = 2), uterus (n = 1), bone (n = 1), axilla (n = 1; unknown tumour type), and abdomen (n = 1; unknown tumour type). Among the probands' first degree relatives, only three of 37 parents and one of 86 siblings who carried the mutation had developed cancer; these individuals experienced tumours of the bone (mother, kindred 7), breast (mother, kindred 18), abdomen (tumour of unknown type; father, kindred 25), and brain (sister, kindred 25) (table 2). Twenty seven cases of cancer were reported among second degree relatives of the probands; nine cases occurred at age 45 years or less and 18 cases occurred after age 45 years. None of the kindreds had classical Li-Fraumeni syndrome.[3] However, LF-like syndrome, as defined by Birch *et al*,[5] was identified in seven of the 30 kindreds.

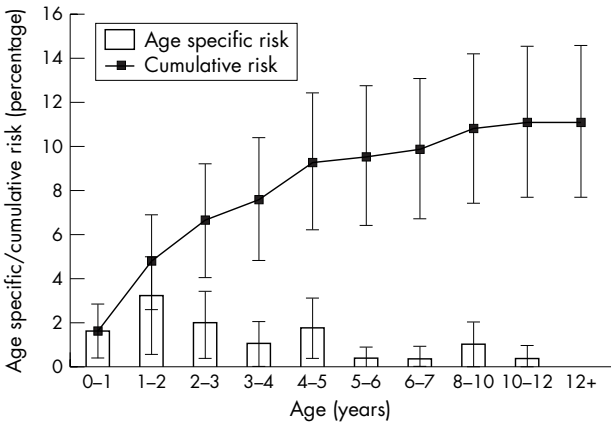

Figure 3 Age specific and overall cumulative risk of adrenocortical tumour in carriers of the R337H *P53* mutation.

Penetrance of the R337H *TP53* mutation

The risk of ACT among carriers of the mutation was calculated on the basis of the number of cases of ACT and the number of carriers of the mutation. Because the carrier frequency was 34.5% among individuals tested, 97 individuals—including one child with ACT—were expected to be carriers among the 281 family members who were not tested. The modification of Gail's likelihood estimation method (detailed above) yielded an overall derived penetrance of 9.9% (95% CI, 8.7% to 11.1%). The penetrance derived by this method for kindreds with more than one case of ACT (12.5% (10.2% to 14.6%)) was greater than that for kindreds with only one case of ACT (8.5% (7.3% to 9.7%)).

Because ACT in these kindreds typically affects young children (mean (SD) age, 3.2 (2.4) years; range 0.7 to 10.8), we estimated the age specific risk and the cumulative risk of ACT for each year of the first 19 years of life (fig 3). There was clearly an increased risk between the ages of 1 and 2 years. The cumulative incidence reached a plateau at age 10 years.

Table 3 Frequency of derived genotypes and estimate of penetrance

Individuals	Kindreds All (n = 30)	One proband (n = 22)	Multiple probands (n = 8)
Tested positive for the R337H *TP53*	240	153	87
Probands (cases of ACC)	40	22	18
Relatives	200	131	69
Parents	37	21	16
Grandparents	8	5	3
Tested negative for the R337H *TP53*	455	314	141
Parents	37	21	16
Grandparents	8	5	3
Frequency of the R337H *TP53*	34.5% (240/695)	33% (153/467)	38% (87/228)
Not tested	281	226	55
Positive cases derived from pedigrees	35	20	15
Proband (ACC case)	1		1
Parent	1		1
Relatives	33	20	13
Derived penetrance (95% confidence interval)	9.9% (8.7, 11.1)	8.5% (7.3, 9.7)	12.5% (10.2, 14.6)

The derived penetrance of 9.9% (table 3) does not exactly match the cumulative risk of 11.3% at 12+ years (fig 3) because of the use of different statistical models, although the values are comparable.

DISCUSSION

We found the estimated (derived) penetrance of ACT among carriers of the R337H *TP53* mutation to be 9.9% (95% CI, 8.7% to 11.1%). The higher estimated penetrance in some kindreds suggests that other still unknown factors may contribute to the tumorigenic potential of the mutation. The cumulative incidence of ACT differed according to age, peaking in the first two years. In this age group, the observed incidence of ACT was about three times that of the 8 to10 year old age group. The cumulative incidence reached a plateau at age 10 years in our cohort, although ACT has been reported in young adult carriers of the R337H *TP53* mutation.[12] These data suggest that approximately one of every 10 carriers of this *TP53* mutation develops ACT. However, this figure was calculated on the basis of data from families in which at least one child had ACT and therefore should be interpreted with caution. The penetrance of ACT in carriers of DNA binding domain *TP53* mutations has not yet been determined.

Interestingly, carriers of the R337H *TP53* mutation do not show an increased risk of the cancers typically associated with DNA binding *TP53* mutations. In the latter cases, there is a pervasive family history of cancer with a lifetime cancer penetrance of 73% for male carriers and virtually 100% for female carriers.[13] Moreover, in carriers of DNA binding *TP53* mutations, bone and soft tissue sarcomas and breast cancers predominate, while childhood ACT comprises only about 3% to 4% of tumours.[14] In carriers of the R337H *TP53* mutation, in contrast, we found childhood ACT to represent at least 57% (41/72) of all cancers, and no case of soft tissue sarcoma was recorded. These observations corroborate the narrow tissue specificity of certain *TP53* mutations, in particular the R337H mutant.

It is not known whether the R337H *TP53* germline mutation increases the predisposition to other malignancies during the course of the carrier's life. In the carrier parental line, we observed several tumour types in second degree relatives more than 45 years of age. Because there is no population based tumour registry in this region of Brazil, it was impossible to determine whether the incidence of malignancies in carriers differed from that in the general population. Four malignant neoplasms were reported in first degree relatives under the age of 45 years. Whether the incidence of extra-adrenal tumours in first degree relatives (4/123; 3.25%) is higher than that in the general population remains to be determined. However, it is worth noting that the family history of extra-adrenal cancers was negative in first degree relatives in 26 of these 30 families. A more rigorous comparison of the frequency and types of cancer in carriers versus non-carriers of the mutation should elucidate whether the R337H *TP53* germline mutation increases the predisposition to extra-adrenal cancers.

Several factors suggest that the R337H *TP53* mutation is relevant to the high incidence of ACT in this Brazilian region. First, the R337H mutation was not found in 200 unselected paediatric patients seen at the endocrinology clinic of the Hospital de Clinicas in Curitiba[6] or in 232 relatives in the non-carrier parental lines in our study group, whereas more than 95% of children with ACT in this region were carriers. Second, in every case of ACT associated with this germline mutation, loss of heterozygosity with retention of the R337H *TP53* allele in tumour tissue was documented.[6] Finally, the R337H *TP53* mutation exerts a range of physical and biochemical effects not observed with wild-type TP53.[7]

We were unable to demonstrate any case of de novo mutation. In all families tested, one parent was consistently found to be a carrier of the mutation. In the few families in which both grandparents in the carrier lineage were available, one of each pair was a carrier. The oldest carrier tested was an 86 year old male. However, the structure of the pedigree (fig 2) provides compelling evidence that the mutation has existed for more than 100 years. The origin of the mutation and its role in increasing the carrier's predisposition to paediatric ACT in a restricted geographical region of Brazil remain elusive. The mutation is not clustered in any single ethnic group or geographical location within the southern region of Brazil. Our previous study of a limited number of families showed no evidence of a single founder effect.[6] Moreover, the incidence of ACT is not increased in most regions of Brazil, and the R337H *TP53* mutation was not identified in any of 10 cases of paediatric ACT in north east Brazil (data not shown). It is possible that environmental factors were responsible for introducing this *TP53* mutation into the genetic pool in this region. Another possibility is that the R337H *TP53* occurs naturally at an extremely low frequency in certain populations but interacts with other, as yet undiscovered, specific genetic changes to increase the predisposition to paediatric adrenocortical carcinoma. Recently, Longui *et al*[15] reported the presence of missense germline mutations and loss of heterozygosity of the inhibin α subunit gene in some cases of adrenal tumour in Brazilian

children with the R337H *TP53* mutation. Moreover, naturally occurring polymorphisms of *TP53* have been shown to alter its function and increase predisposition to specific cancers.[16] We are currently sequencing a large number of unrelated R337H *TP53* alleles to determine whether they have polymorphisms that may be functionally relevant. In addition, we will determine the frequency of the R337H *TP53* mutation in the southern Brazilian population. These data should provide insight into the molecular epidemiology of this tumour.

Paediatric patients are rarely screened for malignancies. In selected instances of inherited cancer susceptibility, however, screening is warranted. For example, the early detection and treatment of familial retinoblastoma cures nearly 100% of patients while preserving vision in the affected eye.[17] Similarly, when detected at an early stage, ACT is almost always curable, whereas large or metastatic ACT carries a dismal prognosis.[8] The availability of a reliable molecular marker to detect the R337H *TP53* mutation allows the rapid identification of carriers in families that have a child with ACT. Once identified, carriers could be screened for early detection of ACT by imaging and endocrine studies. Whether early detection of ACT will reduce the mortality in these patients remains to be determined.

ACKNOWLEDGEMENTS

We wish to thank Kristen Shannon for reviewing the manuscript content, Dr Mary-Ellen Conley for technical assistance in developing the PCR screening tests, and Sharon Naron for editing the article. Supported in part by Cancer Center Support grants CA-21765 and CA-71907 from the National Institutes of Health (US Department of Health and Human Services); a Center of Excellence grant from the State of Tennessee; the Conselho Nacional de Pesquisa (CNPq) of Brazil; Fundacao Araucaria, Curitiba, Parana, Brazil (01/2001), and the American Lebanese Syrian Associated Charities (ALSAC). RMP is the recipient of a PhD scholarship from CAPES (Brazil).

Authors' affiliations

B C Figueiredo, S B I Arram, Centre for Molecular Genetics and Childhood Cancer Research (CEGEMPAC), Clinics Hospital, Federal University of Paraná, Curitiba, PR, Brazil
R Sandrini, R M Pereira, L Lacerda, F Sandrini, Paediatric Division of Endocrinology, Clinics Hospital, Federal University of Paraná
M A Pianovski, Haematology and Oncology, Clinics Hospital, Federal University of Paraná
C Rodriguez-Galindo, R C Ribeiro, Department of Hematology-Oncology, St Jude Children's Research Hospital, Memphis, Tennessee, USA
G P Zambetti, Departments of Biochemistry, St Jude Children's Research Hospital
J Jenkins, Department of Pathology, St Jude Children's Research Hospital
C Cheng, W Liu, Department of Biostatistics, St. Jude Children's Research Hospital
E Michalkiewicz, Division of Oncological Paediatric Surgery, Erasto Gaertner Hospital, Liga Paranaense de Combate ao Câncer, Curitiba, PR, Brazil
M J Mastellaro, Centro Infantil Boldrini, Campinas, SP, Brazil
S Vianna, Department of Haematology and Oncology, Hospital dos Servidores de São Paulo, SP, Brazil
F Watanabe, Division of Haematology and Oncology, Hospital Pequeno Principe, Curitiba, PR, Brazil
P Boffetta, Unit of Environmental Cancer Epidemiology, International Agency for Research on Cancer, Lyon, France

Conflicts of interest: none declared

Correspondence to: Dr Raul C Ribeiro, International Outreach Program, Department of Hematology-Oncology, St Jude Children's Research Hospital, 332 North Lauderdale, Memphis, TN 38105-2794, USA; raul.ribeiro@stjude.org

Received 29 December 2004
Revised version received 15 June 2005
Accepted for publication 18 June 2005
Published Online First 20 July 2005

REFERENCES

1 **Sandrini R**, Ribeiro RC, DeLacerda L. Childhood adrenocortical tumors. *J Clin Endocrinol Metab* 1997;**82**:2027–31.
2 **Parkin DM**, Kramarova E, Draper GJ, Masuyer E, Michaelis J, Neglia J, Qureshi S, Stiller CA. *International incidence of childhood cancer*, vol II. Lyon: International Agency for Research on Cancer, 1998.
3 **Li FP**, Fraumeni JF, Mulvihill JJ, Blattner WA, Dreyfus MG, Tucker MA, Miller RW. A cancer family syndrome in twenty-four kindreds. *Cancer Res* 1988;**48**:5358–62.
4 **Malkin D**, Li FP, Strong LC, Fraumeni JF, Nelson CE, Kim DH, Kassel J, Gryka MA, Bischoff FZ, Tainsky MA. Germ line p53 mutations in a familial syndrome of breast cancer, sarcomas, and other neoplasms. *Science* 1990;**250**:1233–8.
5 **Birch JM**, Hartley AL, Tricker KJ, Prosser J, Condie A, Kelsey AM, Harris M, Jones PH, Binchy A, Crowther D. Prevalence and diversity of constitutional mutations in the p53 gene among 21 Li-Fraumeni families. *Cancer Res* 1994;**54**:1298–304.
6 **Ribeiro RC**, Sandrini F, Figueiredo B, Zambetti GP, Michalkiewicz E, Lafferty AR, DeLacerda L, Rabin M, Cadwell C, Sampaio G, Cat I, Stratakis CA, Sandrini R. An inherited p53 mutation that contributes in a tissue-specific manner to pediatric adrenal cortical carcinoma. *Proc Natl Acad Sci USA* 2001;**98**:9330–5.
7 **DiGiammarino EL**, Lee AS, Cadwell C, Zhang W, Bothner B, Ribeiro RC, Zambetti G, Kriwacki RW. A novel mechanism of tumorigenesis involving pH-dependent destabilization of a mutant p53 tetramer. *Nat Struct Biol* 2002;**9**:12–16.
8 **Michalkiewicz E**, Sandrini R, Figueiredo B, Miranda EC, Caran E, Oliveira-Filho AG, Marques R, Pianovski MA, Lacerda L, Cristofani LM, Jenkins J, Rodriguez-Galindo C, Ribeiro RC. Clinical and outcome characteristics of children with adrenocortical tumors: a report from the International Pediatric Adrenocortical Tumor Registry. *J Clin Oncol* 2004;**22**:838–45.
9 **Gail MH**, Pee D, Benichou J, Carroll R. Designing studies to estimate the penetrance of an identified autosomal dominant mutation: cohort, case-control, and genotyped-proband designs. *Genet Epidemiol* 1999;**16**:15–39.
10 **Parzen E**. Markov chains: discrete parameter. In: Lehmann EL, eds. *Stochastic processes*. San Francisco: Holden-Day, 1962:187–275.
11 **Kalbfleisch JD**, Prentice RL. Competing risks and multistate models. In:Balding DJ, Bloomfield P, Cressie NA, *et al*, editors. *The statistical analysis of failure time data*, 2nd ed. Hoboken: John Wiley & Sons, 2002:247–77.
12 **Latronico AC**, Pinto EM, Domenice S, Fragoso MC, Martin RM, Zerbini MC, Lucon AM, Mendonca BB. An inherited mutation outside the highly conserved DNA-binding domain of the p53 tumor suppressor protein in children and adults with sporadic adrenocortical tumors. *J Clin Endocrinol Metab* 2001;**86**:4970–3.
13 **Chompret A**, Brugieres L, Ronsin M, Gardes M, Dessarps-Freichey F, Abel A, Hua D, Ligot L, Dondon MG, Bressac-de Paillerets B, Frebourg T, Lemerle J, Bonaiti-Pellie C, Feunteun J. P53 germline mutations in childhood cancers and cancer risk for carrier individuals. *Br J Cancer* 2000;**82**:1932–7.
14 **Kleihues P**, Schauble B, Zur HA, Esteve J, Ohgaki H. Tumors associated with p53 germline mutations: a synopsis of 91 families. *Am J Pathol* 1997;**150**:1–13.
15 **Longui CA**, Lemos-Marini SH, Figueiredo B, Mendonca BB, Castro M, Liberatore R, Watanabe C, Lancellotti CL, Rocha MN, Melo MB, Monte O, Calliari LE, Guerra-Junior G, Baptista MT, Sbragia-Neto L, Latronico AC, Moreira A, Tardelli AM, Nigri A, Taymans SE, Stratakis CA. Inhibin alpha-subunit (INHA) gene and locus changes in paediatric adrenocortical tumours from TP53 R337H mutation heterozygote carriers. *J Med Genet* 2004;**41**:354–9.
16 **Li X**, Dumont P, Pietra AD, Shetler C, Murphy ME. The codon 47 polymorphism in p53 is functionally significant. *J Biol Chem* 2005;**280**:24245–51.
17 **Abramson DH**, Beaverson K, Sangani P, Vora RA, Lee TC, Hochberg HM, Kirszrot J, Ranjithan M. Screening for retinoblastoma: presenting signs as prognosticators of patient and ocular survival. *Pediatrics* 2003;**112**:1248–55.