Proc. Natl. Acad. Sci. USA
Vol. 83, pp. 2874–2878, May 1986
Biophysics

Topological and modulated distribution of surface markers on endothelial cells

(angiotensin-converting enzyme/extracellular matrix/fluorescence recovery after photobleaching/total internal reflection fluorescence)

MAURICE NAKACHE*†, HERMANN E. GAUB*, ALAIN B. SCHREIBER‡, AND HARDEN M. MCCONNELL*

*Stauffer Laboratory for Physical Chemistry, Stanford University, Stanford, CA 94305; and ‡Institute of Biological Sciences, Syntex Research, Palo Alto, CA 94305

Contributed by Harden M. McConnell, December 23, 1985

ABSTRACT **The mobility and distribution of angiotensin-converting enzyme (peptidyl-dipeptide hydrolase, EC 3.4.15.1) and a specific endothelial cell surface protein was assessed by fluorescein-conjugated monoclonal antibodies on bovine and murine endothelial cells grown on their extracellular matrix. The combination of data obtained from fluorescence recovery after photobleaching measurements and observations under epifluorescence and total internal reflection fluorescence reveals a restriction of these protein markers to the apical membrane of endothelial cell. This asymmetry is evident both when cells are grown at a sparse density or at confluence. When cells are brought into suspension, the fluorescein-conjugated antibody is found over the entire cell surface. The fluorescence disappears from the basal part of the cell when the cells are again spread on coverslips coated with a layer of extracellular matrix. Conversely, cells spread on glass coverslips without extracellular matrix do not show this restriction phenomenon. It is suggested that the extracellular matrix provides the signal to induce the restricted topology of membrane protein markers on endothelial cells.**

The fluid properties of lipid bilayers have been emphasized for the past 15–20 years. There also has been much work on the measurement of the lateral diffusion of lipids and proteins in biological membranes (1). It has become quite clear that the physical state of cell surface components is highly dynamic. It is established that many proteins are mobile and that the distribution of proteins in the plane of cell membrane has physiological significance (2). It also is becoming clear that, in fully differentiated tissues, a large fraction of membrane proteins is neither freely mobile nor randomly distributed (3). We may ask the question: What specific cell surface interactions are responsible for inducing lateral rearrangement of membrane components into specific patterns of membrane topography?

We have reported (4) on the asymmetry of the lateral mobility of membrane phospholipids in cultured endothelial cells by discriminating the apical from the basal surfaces. The complex of the extracellular support on which the cells were grown appeared to induce the observed asymmetry in membrane properties. Cells in tissues are in extensive contact with a complex network of extracellular macromolecules referred to as the extracellular matrix (ECM) (5). The role of the ECM extends beyond a mere constitutive function for cells and tissues; the ECM is a highly organized and dynamic lattice (6) that shunts the cell motility and its response to exogeneous stimuli (7).

In an attempt to test and extend our previous observations on the asymmetric properties of endothelial cell surface components, we studied the dynamic behavior of two membrane proteins, angiotensin-converting enzyme (peptidyl-dipeptide hydrolase, EC 3.4.15.1) and a specific endothelial cell antigen as recognized by monoclonal antibodies. Diffusion coefficients were determined by fluorescence recovery after photobleaching (FRAP), while topological localization was assessed by the technique of total internal reflection fluorescence (TIRF). We observed a restriction of the two protein markers to the apical cell surface both on single (sparse) cells and in confluent monolayers of endothelial cells cultured on extracellular matrix.

MATERIALS AND METHODS

Cells. Bovine pulmonary aorta cells (BPAE) were established from primary cultures. LEII lung microvascular endothelial cells (gift from A. Curtis, Glasgow, Scotland) and BPAE were grown in Dulbecco's minimal essential medium (DMEM, GIBCO) supplemented with 10% fetal bovine serum (HyClone, Logan, UT). Cells were grown to confluence on either glass coverslips, silicon surfaces (Aurel, Santa Clara, CA), or quartz slides (Quartz Scientific, Sunnyvale, CA). For observation of cells in suspension, cells were washed with phosphate-buffered saline containing 10 mM EDTA and scraped with a rubber policeman. The ECM layer was prepared by mild detergent and alkali treatment (8).

Monoclonal Antibodies. The murine monoclonal IgM antibody against angiotensin-converting enzyme (9) was the gift of R. Auerbach (University of Wisconsin, Madison). The murine monoclonal IgM antibody HE1 was generated from a fusion of P3 myeloma cells with splenocytes of BALB/c mice immunized intraperitoneally with primary cultures of human umbilical vein endothelial cells. The HE1 antibody reacts with a 10-kDa surface antigen expressed by a variety of endothelial cells, including BPAE and LEII, and not by epithelial-, fibroblastic-, or hemopoietic-lineage cell lines (unpublished data). Monoclonal antibodies were purified from ascites by precipitation with 40% ammonium sulfate, dialyzed versus phosphate-buffered saline, and chromatographed on Ultrogel AcA34 gel (LKB). Antibodies were labeled with fluorescein isothiocyanate. The molar ratio of fluorophore to protein varied between 10 and 12.

RESULTS

FRAP Measurement. Diffusion coefficients for either fluorescein-conjugated HE1 or anti-angiotensin-converting-enzyme monoclonal antibodies bound to either sparse BPAE or

The publication costs of this article were defrayed in part by page charge payment. This article must therefore be hereby marked "*advertisement*" in accordance with 18 U.S.C. §1734 solely to indicate this fact.

Abbreviations: ECM, extracellular matrix; FRAP, fluorescence recovery after photobleaching; TIRF, total internal reflection fluorescence; BPAE cells, bovine pulmonary aortic endothelial cells.

†Permanent address: Institut National de la Santé et de la Recherche Médicale, U256, Hopital Broussais 75014, Paris, France.

LEII cells grown on ECM were calculated from FRAP curves and are shown in Table 1. We compared values for cells on glass coverslips with those on silicon surfaces with a natural oxide layer. In the latter case, the semiconductor acts as fluorescence acceptor by energy transfer for signals contributed by the basal cell surface (4). Therefore, diffusion coefficients, *D*s, observed in this case reflect the lateral mobility of the fluorophores on the apical cell surface. For BPAE cells *D* was between 10 and 30 $\times 10^{-12}$ cm^2/sec and for LEII cells was between 1 and 2 $\times 10^{-12}$ cm^2/sec for the anti-angiotensin-converting-enzyme and HE1 monoclonal antibodies. Except for a slight increase of *D* in the case of the HE1 antibody on LEII cells (from 1 to 7 $\times 10^{-12}$ cm^2/sec), all other *D* values were similar for cells on glass coverslips and silicon surfaces. FRAP measurements were also performed on confluent BPAE and LEII cells, and results are shown in Table 1. There was no significant difference for any of the calculated *D* values between confluent cells and sparse cells, indicating that the lateral mobility of the studied markers is independent of cell–cell contact. The above results were in sharp contrast with those obtained for a membrane phospholipid marker (4), where *D* was much higher on the apical cell surface. The distribution of the protein markers was investigated by an independent optical technique.

Microscopy. An optical setup was utilized to allow observation by phase-contrast microscopy, epifluorescence, and TIRF on the same cell (Fig. 1). Endothelial cells were grown on ECM and on quartz surfaces and were prelabeled with the phospholipid marker NBD-PPC {1-palmitoyl-2-[6-(7-nitrobenz-2-oxa-1,3-diazol-4-yl)amino]caproyl phosphatidylcholine} (Fig. 2; *A* is phase contrast, while *B* and *C* are apical epifluorescence and basal TIRF pictures). Clearly, the phospholipid marker diffused freely in both the apical and basal membrane. When cells were labeled with the HE1 or anti-angiotensin-converting-enzyme monoclonal antibody, however, a fluorescence signal could only be obtained by epifluorescence at the apical cell membrane (Fig. 2*E*). At the basal surface, there was no fluorescence signal to be detected by TIRF, only some weak nonspecific ECM fluorescence (Fig. 2*F*).

In an attempt to demonstrate active receptor exclusion from the bottom to the apicolateral side of the cell and to observe the kinetics of this exclusion, endothelial cells were grown on ECM and were scraped in suspension. Then the antibody labeling was performed. Microscopic observations were carried out as function of time (Fig. 3). The fluorescein-conjugated antibody was visualized over the cell surface.

Table 1. Diffusion coefficient measurement using silicon discrimination procedure

	$D \times 10^{12}$, cm^2/sec			
	Anti-ACE antibody		HE1 antibody	
Cells	Glass	Silicon	Glass	Silicon
BPAE				
Sparse	40	32	90	12
Confluent	37	30	7	11
LEII				
Sparse	2	3	1	7
Confluent	2.1	2.9	1.4	9

Cells prelabeled with either fluorescein monoclonal antibody or the fluorescent phospholipid marker were mounted on glass coverslips or silicon surfaces under phosphate-buffered saline on microscope slides. The 488-nm wavelength laser line (Spectra Physics 2000) was used for photobleaching experiments. Cells were exposed to the projected image of a Ronchi pattern of 133 lines per inch and illuminated by a burst of laser light of sufficient duration to bleach 50–90% of the probe molecules in the brightly illuminated regions (10). Diffusion coefficients were calculated from the FRAP curves.

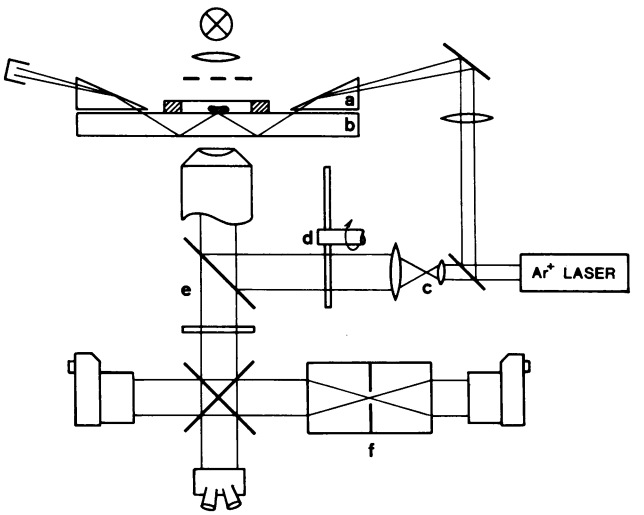

FIG. 1. Microscopic observations. Microscopic investigation of the cells was carried out with an inverted microscope (Nikon Diaphot). The beam of an argon ion laser (Spectra Physics 2000) was attenuated and split for epiillumination and TIRF excitation (11). To avoid speckled patterns in the case of the epiillumination, the beam was expanded (*c*) and passed through a rotating Plexiglass plate (*d*) with surface undulations of the order of several wavelengths. Many different speckled patterns are generated and mixed by rotating the plate at high frequency (50 Hz). For TIRF excitation, the beam was focused under an aperture angle of 2° to have a spot size of 200 μm in the object plane. It was coupled into the quartz slide (*b*) by a high-refractive-index glass prism (*a*). Glycerin was used as an index-matching fluid. To minimize penetration of the wave into the apical cell membranes, *p*-polarization was chosen. For the given incidence angle of 75°, the penetration depth of the evanescent field was 600 Å. For observation, the first reflection was chosen to avoid excitation by scattered light. As photobleaching during the exposure time of the camera usually makes it difficult to compare two subsequent fluorescence pictures of the same cell, we used a multichannel plate image intensifier tube (*f*) (Ni-Tech, Skokie, IL). The loss of resolution is balanced by the reduction of the exposure time by a factor of 10. Typically, it was of the order of 1 sec, which is short compared to the bleaching time of 20 sec at the given illumination intensity. In both cases, the standard filter set (*e*) of the Nikon microscope was used (cutoff, 500 nm).

When the cells were spread again over a coverslip coated with ECM, the fluorescence disappeared at the bottom of the cell after about 0.5 hr.

The restriction did not occur when cells were just beginning to spread on the coverslip. The fluorescence of an aliquot of cells in suspension was always uniform. There was never any fluorescence loss at the apical side of the cell. This rules out lateral migration upon cell spreading followed by new unmarked antigens.

DISCUSSION

The redistribution of cell surface components has been reported to be dependent upon both intercellular contact and cell interactions with its ECM (12). Extensive cytoskeletal structures are found adjacent to the plasma membrane in regions that contain highly localized or immobile integral membrane proteins (13). In at least two cases, a segregation has been proposed to be caused by physical barriers: in epithelia, the zonula occludens (tight junction) is thought to separate apical and basolateral membrane proteins (14); in myelinated neurons, the axoglial junction is thought to confine proteins such as sodium channels to the node of Ranvier (15). Other authors, however, have provided evidence that some proteins may pass across tight junctions of epithelia (16) and claim a lack of physical compartmentaliza-

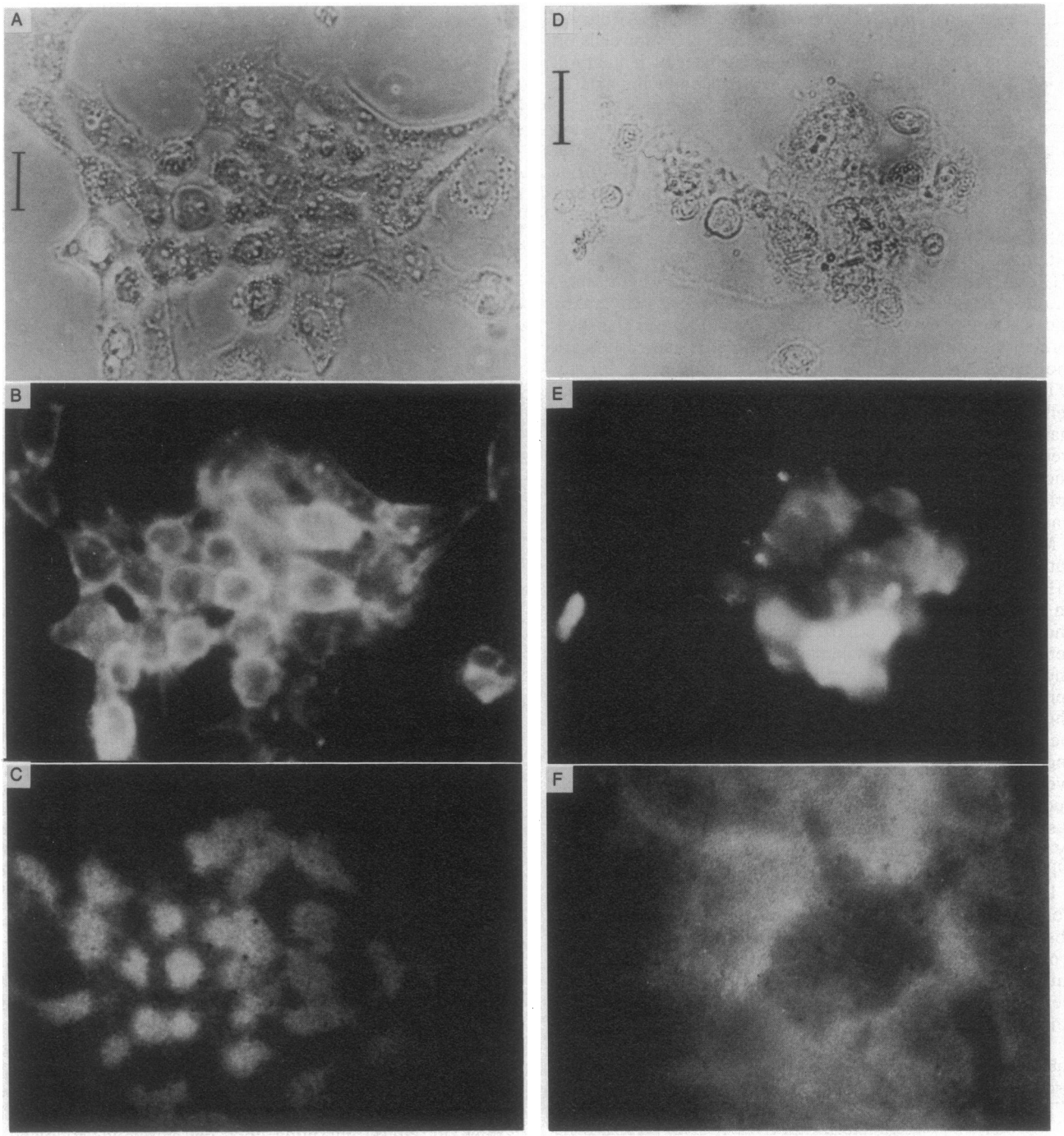

FIG. 2. (*Left*) Endothelial cells grown on ECM-coated quartz slides preincubated with the fluorescent phospholipid marker. The whole cell is visible in phase contrast (*A*), the stained membrane is visible in epiillumination fluorescence (*B*), and the basal membrane alone is visible in TIRF (*C*). (Bar = 10 μm.) (*Right*) Same as *Left* but stained with fluorescent anti-angiotensin-converting-enzyme antibodies. Note that the fluorescence of the basal membrane alone (*F*) is comparable with the autofluorescence of the ECM and that this is much weaker than the fluorescence of the whole cell membrane (*E*).

tion of the plasma membrane (17). In this report we have studied the mobile properties of two endothelial cell surface proteins. The antigen recognized by the HE1 monoclonal antibody is a 70-kDa surface protein specific for endothelial cells. Angiotensin-converting enzyme or kininase II is a dipeptidyl hydrolase that catalyzes the release of His-Leu from angiotensin I to yield angiotensin II. Angiotensin-converting enzyme was shown to be associated with the surface of luminal cells of the vasculature (18). Immunohistochemical evidence indicates that it may have a restricted localization on the luminal surface of the endothelial cells (19), which makes functional sense. We have reported (4) on the use of FRAP measurements on cells grown on silicon surfaces to discriminate the lateral mobility of phospholipids at the apical and basal cell membrane level. In sharp contrast with the observed asymmetry for phospholipids, very similar *D* values were obtained for the antibodies to endothelial cell markers whether cells were grown on ECM, glass coverslips, or silicon surfaces. Further, the degree of cell confluence did not alter the lateral mobility of these markers. In the case of silicon surfaces, only fluorescence signals originating in the apical cell membrane contribute to the FRAP curves, as those from the basal cell surface are quenched by the semiconductor. Therefore, these results could be interpreted

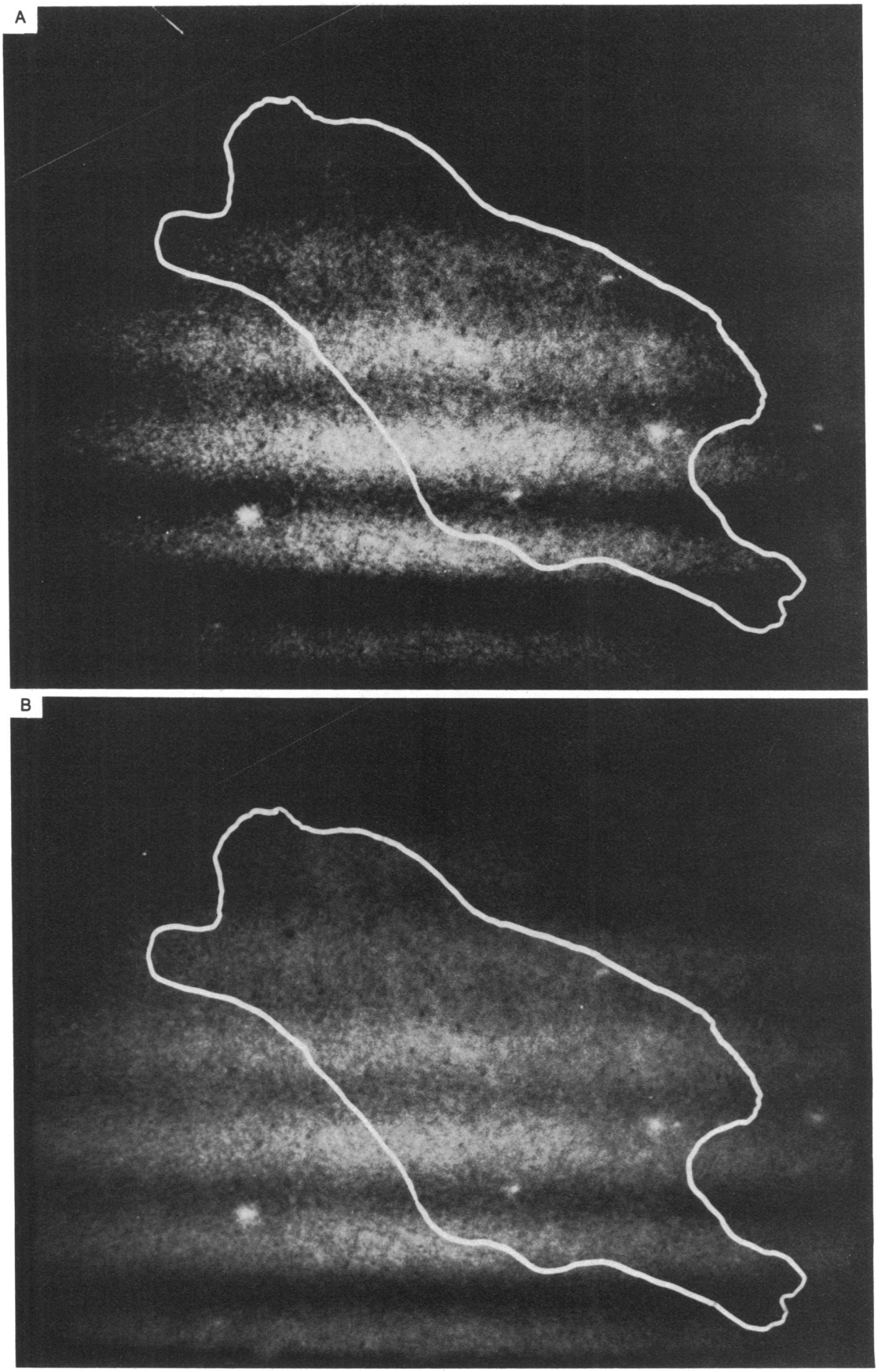

FIG. 3. In order to distinguish between specific fluorescence and the background, TIRF excitation was carried out with an interference pattern. It was created by splitting the Ar laser beam with a 50% mirror and focusing both beams on the contact region between cells and substrate. This procedure permits one to observe the loss of cell fluorescence on the basal surface. (*A*) Aliquot of cell suspension spread over the matrix. (*B*) After 0.5 hr one observes the fluorescence background and the loss of the cell fluorescence on the basal surface.

as either of the following: (*i*) lateral mobility of the two studied markers is similar or identical in the apical and basal cell membrane or (*ii*) markers are restricted to the apical cell membrane. In order to distinguish these possibilities, an optical TIRF setup was used. The results demonstrated the restriction of the HE1 and anti-angiotensin-converting-enzyme monoclonal antibodies to the apical surface of endothelial cells grown on ECM. In contrast, cells in suspension were stained homogeneously so the restriction occurs only in the case of cells spread on ECM and not on glass coverslips.

Based on these observations, we suggest that (*i*) the apical surface restriction of at least two endothelial cell membrane markers is independent of cell–cell contact and that (*ii*) the complex of the ECM matrix on which the cells were grown induces the observed asymmetry in membrane properties. The ECM provides the signal to the endothelial cell to organize and maintain its topology. Further experimentation with different natural matrix materials may help to elucidate the molecular basis by which cells and matrix interact with each other (20).

We acknowledge the excellent technical assistance of B. de Lustro. This research was supported by a grant from the Fogarty International Center National Institutes of Health-Centre National de la Recherche Scientifique (France) program to M.N., a postdoctoral fellowship from the Deutsche Forschungsgemeinschaft to H.E.G., and National Institutes of Health Grant 5R01 AI 13587-10 to H.M.McC.

1. Elson, E. L. (1985) *Annu. Rev. Phys. Chem.* **36**, 379–406.
2. Axelrod, D. (1983) *J. Membr. Biol.* **75**, 1–10.
3. Fraser, S. E. & Poo, M. M. (1982) *Curr. Top. Dev. Biol.* **17**, 77–100.
4. Nakache, M., Schreiber, A. B., Gaub, H. & McConnell, H. M. (1985) *Nature (London)* **317**, 75–77.
5. Yamada, K. M. (1983) *Annu. Rev. Biochem.* **52**, 761–799.
6. Trelstad, R. L. & Silver, F. H. (1981) in *Cell Biology of Extracellular Matrix*, ed. Hay, E. D. (Plenum, New York), pp. 179–215.
7. Koppel, D. E., Sheetz, M. P. & Schindler, M. (1981) *Proc. Natl. Acad. Sci. USA* **78**, 3576–3580.
8. Avnur, Z. & Geiger, B. (1981) *J. Mol. Biol.* **153**, 361–379.
9. Auerbach, R., Alby, L., Grieves, J., Joseph, J., Lindgren, C., Morrissey, L. W., Sidkey, Y. A., Tu, M. & Watt, S. L. (1982) *Proc. Natl. Acad. Sci. USA* **79**, 7891–7895.
10. Smith, B. A. & McConnell, H. M. (1978) *Proc. Natl. Acad. Sci. USA* **75**, 2759–2763.
11. Axelrod, D., Burghardt, T. P. & Thompson, N. L. (1984) *Annu. Rev. Biophys. Bioeng.* **13**, 247–268.
12. Folkman, J. & Moscona, A. (1978) *Nature (London)* **273**, 345–349.
13. Waxmann, S. G. & Quick, D. C. (1978) in *Physiology and Pathology of Axons*, ed. Waxmann, S. G. (Raven, New York), pp. 125–130.
14. Pisam, M. & Ripoche, P. (1976) *J. Cell Biol.* **71**, 907–920.
15. Rosenbluth, J. (1976) *J. Neurocytol.* **5**, 731–745.
16. Hauri, H. P., Quaroni, A. & Isselbacher, K. (1980) *Proc. Natl. Acad. Sci. USA* **77**, 6629–6633.
17. Almers, W. & Stirling, C. (1984) *J. Membr. Biol.* **77**, 169–186.
18. Caldwell, P. R. B., Seegal, B. C., Hill, K. C., Das, M. & Soffer, R. L. (1976) *Science* **191**, 1050–1051.
19. Ryan, J. W., Ryan, U. S., Schultz, D. R., Whitaker, C., Chung, A. & Dorer, F. E. (1975) *Biochem. J.* **146**, 497–499.
20. Edelman, G. M. (1985) *Annu. Rev. Biochem.* **56**, 135–169.