Author Manuscript
Author Manuscript
Author Manuscript
Author Manuscript

HHS Public Access
Author manuscript
Semin Cell Dev Biol. Author manuscript; available in PMC 2023 June 01.

Published in final edited form as:
Semin Cell Dev Biol. 2023 June ; 142: 4–12. doi:10.1016/j.semcdb.2022.05.022.

From temporal patterning to neuronal connectivity in *Drosophila* type I neuroblast lineages

Heather Q Pollington,
Austin Q Seroka,
Chris Q Doe*
Institute of Neuroscience, Howard Hughes Medical Institute, University of Oregon, Eugene, OR 97403

Abstract

The development of the central nervous system (CNS) in flies and mammals requires the production of distinct neurons in different locations and times. Here we review progress on how *Drosophila* stem cells (neuroblasts; NBs) generate distinct neurons over time. There are two types of NBs: type I and type II NBs (defined below); here we focus on type I NBs; type II NBs are reviewed elsewhere in this issue. Type I NBs generate neural diversity via the cascading expression of specific temporal transcription factors (TTFs). TTFs are sequentially expressed in neuroblasts and required for the identity of neurons born during each TTF expression window. In this way TTFs specify the "temporal identity" or birth-order dependent identity of neurons. Recent studies have shown that TTF expression in neuroblasts alter the identity of their progeny, including directing motor neurons to form proper connectivity to the proper muscle targets, independent of their birth-order. Similarly, optic lobe (OL) type I NBs express a series of TTFs that promote proper neuron morphology and targeting to the four OL neuropils. Together, these studies demonstrate how temporal identity is crucial in promoting proper circuit assembly within the *Drosophila* CNS. In addition, TTF orthologs in mouse are good candidates for specifying neuron types in the neocortex and retina. In this review we highlight the recent advances in understanding the role of TTFs in CNS circuit assembly in *Drosophila* and reflect on the conservation of these mechanisms in mammalian CNS development.

Keywords

temporal identity; neuroblast; neuronal diversity; Drosophila; circuits

1.0 Introduction

During *Drosophila* neurogenesis, a small pool of neural progenitor cells generates a diverse population of neurons. Initially, embryonic neural progenitors (or neuroblasts; NBs) are diversified by spatially restricted expression of early transcription factors (reviewed in

*Author for correspondence.

Competing interests
None declared.

Author Manuscript Author Manuscript Author Manuscript Author Manuscript

(Skeath and Thor, 2003). *Drosophila* NBs undergo type I or type II lineages. In type I lineages, the NB generates a series of ganglion mother cells (GMCs) that each produce a pair of sibling neurons; in type II NB lineages, the NB generates a series of intermediate neural progenitors (INPs) which each divide asymmetrically to generate 4-6 GMCs and their subsequent sibling neurons. In this review we focus on temporal patterning in type I NBs; type II lineages will be covered by another review in this issue.

Diversity within type I clonally related neurons is achieved through temporal patterning, in which each NB undergoes a series of asymmetric divisions, sequentially expressing a cascade of key temporal transcription factors (TTFs) (Isshiki et al., 2001). Recent work in the ventral nerve cord (VNC) and central complex (CX) has demonstrated the ability of TTFs to regulate high-order features of neuronal identity in post-mitotic neurons, including molecular identity, morphology, and axon and dendrite targeting (Mark et al., 2021; Meng et al., 2020, 2019; Seroka et al., 2020; Seroka and Doe, 2019; Sullivan et al., 2019). These results define temporal patterning as a powerful mechanism for generating neuronal diversity and determining terminal features. While this phenomenon has been well characterized in the VNC, temporal patterning is employed in other key brain regions as well, including the central brain and visual processing centers (optic lobes). Here we review the recent advances in understanding the role of temporal patterning and TTFs in circuit assembly and neural function in the *Drosophila* CNS.

2.0 Type I neuroblasts in the ventral nerve cord

Neuroblasts in the *Drosophila* VNC sequentially express the TTFs Hunchback (Hb), Krüppel (Kr), Pdm1/2 (Pdm), and Castor (Cas) (Figure 1). As they progress through the TTF cascade, they undergo asymmetric cell division to generate a series of GMCs; each GMC inherits the TTF expressed at the time of its birth. Next, GMC division generates two siblings, one with a "Notch^{ON}" identity and one with a "Notch^{OFF}" identity (Doe, 2017). Together, these processes generate a highly diverse population of neurons within the VNC.

The best known embryonic lineage is that of NB7-1, which sequentially generates the U1, U2, U3, VO, U4 and U5 Notch^{ON} motor neurons (MNs; Figure 1) (Averbukh et al., 2018; Grosskortenhaus et al., 2006; Isshiki et al., 2001; Kohwi et al., 2013; Pearson and Doe, 2003; Seroka et al., 2020). Named after their U-shaped morphology, the U MNs each target individual dorsal or lateral larval muscles. The first TTF, Hunchback, specifies the earliest temporal identity in most NB lineages, including U1/U2 in the NB7-1 lineage. Misexpression studies show that prolonged expression of Hb produces an increased number of Hb+ early-born cells, largely at the expense of late-born U3-U5 cells in the NB7-1 lineage (Isshiki et al., 2001; Novotny et al., 2002). Krüppel expression follows Hb, to specify an early-intermediate temporal identity; U3 in the NB7-1 lineage. Misexpression of Kr generates ectopic Kr+ U3 neurons without interfering with Hb+ neuronal identity. *Kr* mutants fail to produce the expected Kr+ U3 neurons (Isshiki et al., 2001). The overlapping combination of Kr/Pdm specifies VO MN identity (see below for more details), while Pdm specifies U4 identity, and the Pdm/Cas combination specifies U5 MN identity (Grosskortenhaus et al., 2006). Additionally, Pdm and Cas have been shown to close the second and third temporal identity windows in NB3-1, regulating the transition from

Author Manuscript Author Manuscript Author Manuscript Author Manuscript

Kr>Pdm and Pdm>Cas (Grosskortenhaus et al., 2006; Tran and Doe, 2008). Note that the Notch^{OFF} interneurons in the NB7-1 and NB3-1 lineages have yet to be characterized. Similarly, Cas has been shown to specify temporal identity of abdominal leucokinin+ (ABLK) neurons, involved in osmotic balance, from the NB5-5 lineage (Benito-Sipos et al., 2010). These studies highlight how a single TTF or combinatorial TTFs promotes the identity of a single neuron.

Lineages that generate two Hb+ GMCs have been reported to have different levels of Hb protein (Kanai et al., 2005; Mettler et al., 2006; Moris-Sanz et al., 2014; Urban and Mettler, 2006). Further analysis will elucidate whether TTF concentration is important in specifying temporal identity or if a particular concentration threshold is sufficient. These examples clearly show the role of TTFs in specifying unique neuronal identity. While our understanding of the combinatorial potential of temporal identity deepens, recent work has also begun to extend temporal identity fate determination in promoting circuit assembly.

2.1 Temporal cohorts and circuit membership of interneurons

During *Drosophila* neurogenesis, NB divisions displace cells towards the interior of the CNS, thereby positioning early-born Hb+ cells deep in the VNC cortex and later-born Cas+ cells more superficially (Brody and Odenwald, 2000; Isshiki et al., 2001; Kambadur et al., 1998; Mark et al., 2021). In this way, neurons can be placed into temporal cohorts, or birth-order categories, based on their radial position alone. Each cohort, divided into approximately four birth-order categories (i.e. early, early-intermediate, late-intermediate, and late), consist of different cell types and various cell numbers per NB lineage. For example, the neurons located the deepest (near the neuropil) are an early temporal cohort and likely to be Hb+, although the relationship between temporal cohorts and TTF expression windows is only approximate. Thus, categorizing neurons into temporal cohorts serves as a proxy for their position in the TTF cascade.

Recent work reveals a strong correlation between temporal cohort identity and circuit assembly. NB3-3 gives rise to a population of interneurons identified by Even-skipped (Eve) expression and lateral cell body positioning (“Eve Lateral” or EL neurons) (Bossing et al., 1996; Schmid et al., 1999; Schmidt et al., 1997). The EL interneuron population is subdivided into early and late temporal cohorts based on expression of the *R11F02-Gal4* line; the deep positioned early-born temporal cohort lacks *R11F02-Gal4* expression, while the superficial positioned late-born temporal cohort expresses *R11F02-Gal4*, allowing each temporal cohort to be studied separately (Wreden et al., 2017). Optogenetic stimulation of the early-born ELs alone, using *EL-Gal4* (expressed in both temporal cohorts) and *R11F02-Gal80* (to prevent expression in the late temporal cohort) induces a larval escape rolling behavior. In contrast, specific stimulation of the late temporal cohort, using *R11F02-Gal4*, results in left/right uncoordinated movements (Wreden et al., 2017). Supporting these behavioral results, analysis of the EL partner neurons in a Transmission Electron Microscopy (TEM) reconstruction of the larval CNS showed that early-born EL neurons receive direct synaptic inputs from mechanosensory chordotonal neurons (neuron that can induce rolling) whereas the late-born EL neurons received direct input from proprioceptive neurons (Heckscher et al., 2015; Wreden et al., 2017). Thus, the early temporal cohort is

Author Manuscript Author Manuscript Author Manuscript Author Manuscript

in a mechanosensitive circuit whereas the late temporal cohort is in a proprioceptive circuit, supporting a model in which different temporal cohorts have distinct circuit membership.

Shared connectivity of temporal cohorts has also been demonstrated in the analysis of seven bilateral NB lineages mapped in the TEM volume (Mark et al., 2021). Each of these lineages produces a Notch^{ON} and Notch^{OFF} hemilineage; with Notch^{ON} hemilineages projecting to the dorsal (motor) neuropil and Notch^{OFF} hemilineages projecting to a more ventral domain (Figure 1B) (Mark et al., 2021). Within each NB hemilineage there are four temporal cohorts, and thus each lineage consists of eight "hemilineage/temporal" cohorts e.g. a Notch^{ON} early temporal cohort or a Notch^{OFF} late temporal cohort. Analysis of synapse localization within hemilineage/temporal cohorts revealed that each temporal cohort within a Notch^{ON} hemilineage localizes presynapses to a shared region of the neuropil, while each ventral hemilineage-temporal cohort localized postsynapses to a distinct region in the ventral sensory neuropil (Mark et al., 2021). Thus, hemilineage/temporal cohorts share a common synapse localization domain in the neuropil; the authors hypothesize this may allow each temporal cohort to receive distinct sensory input and generate distinct motor output, consistent with participation in distinct circuits (Mark et al., 2021).

The shared synapse localization, connectivity, and circuit membership of temporal cohorts in multiple NB lineages in the VNC generates a clear and testable hypothesis that temporal cohort membership (a proxy for temporal identity) plays a crucial role in determining synapse targeting, connectivity and circuit membership throughout the VNC. Functional studies will be needed to test this hypothesis.

2.2 Temporal cohorts and circuit membership of motor neurons

In addition to the link between TTFs and circuit membership of NB3-3 interneurons (described above), TTFs have been shown to be functionally important for MN synapse targeting and connectivity in the NB7-1 lineage. NB7-1 divides every 30 min to generate the U1-U5 and the single VO MN (Figure 1); the identity of the sibling neurons is unknown. The morphology and connectivity of each MN is unique: U1 and U2 project axons ipsilaterally to the dorsal oblique muscles (DO1 and DO2, respectively), whereas U3-U5 form neuromuscular junctions with lateral muscles (DA2, DA3, and LL1), and the VO motor neuron projects to the ventral-most muscles (ventral oblique; VO) (Figure 1C) (Meng et al., 2020; Seroka et al., 2020).

U1-U5 axons grow into the muscle field sequentially, in order of their birth. They also have distinct temporal identity. Two independent studies asked whether U MNs target their muscle based on birth timing ("first come, first served") or molecular temporal identity (Meng et al., 2019; Seroka and Doe, 2019). To break the correlation between birth timing and temporal identity, each lab misexpressed Hb throughout the NB7-1 lineage to generate ectopic U1 MNs that had the same temporal identity but had different birth dates. If all ectopic U1 neurons target the dorsal muscles, then temporal identity regulates targeting; if ectopic U1 neurons progressively target dorsal, lateral, and ventral muscles, then birth timing is most important for neuromuscular connectivity. Both labs observed the former result: muscle targeting correlated with temporal identity not birth timing (Meng et al., 2019; Seroka et al., 2020; Seroka and Doe, 2019). These experiments strongly indicate that at least

Author Manuscript Author Manuscript Author Manuscript Author Manuscript

one TTF, Hb, encodes the information necessary for proper MN-muscle connectivity. The relevant downstream cell recognition molecules await discovery.

The Heckscher lab extended these experiments to determine if MN-muscle targeting was stable over larval development, and whether the connectivity was functional (Meng et al., 2019). Interestingly, third instar larvae following Hb misexpression show significantly more synaptic connections to muscle DO2 (normal U2 target) than muscle DO1 (normal U1 target). They propose this may be due to the increased occupancy of muscle DO1, in which the muscle is physically over crowed with ectopic U1 MNs, driving later-born ectopic U1s to form connections with the closest alternative, DO2. Ectopic synapses were observed to make functional connections based on localization of pre-synaptic markers for synaptic vesicles (Synapsin; Syn) and active zones (Bruchpilot; Brp), as well as the postsynaptic markers for muscle post-synaptic density (Discs large; Dlg) and the neurotransmitter glutamate receptor, GluRIIA (Meng et al., 2019). Post-synaptic responses from spontaneous synaptic vesicle release were also observed in every synaptic branch in both controls and Hb misexpressed larvae, indicating functional synapses.

In addition to a role in MN axon target choice, TTFs are also implicated in MN dendrite targeting (Meng et al., 2019; Seroka and Doe, 2019). U1 and U2 dendrites project to both the ipsilateral and contralateral dorsal neuropil, whereas U3-U5 dendrites project to the same domain but remain ipsilateral. Hb misexpression generated ectopic U1 neurons based on molecular identity, and many of them projected to the contralateral dorsal neuropil as do endogenous U1 neurons. The ectopic U1 neurons did not, however, perfectly replicate endogenous U1 neuron dendrite targeting. Ectopic neurons projected contralaterally in a dorsal region whereas endogenous U1 neurons cross the midline ventrally. Nevertheless, despite the new routing, ectopic U1 neurons projected contralaterally to the U1 dendrite domain, showing that temporal identity plays an important role in motor dendrite targeting in addition to its role in axon targeting and circuit formation (Meng et al., 2019; Seroka and Doe, 2019). It remains an open question whether the ectopic U1 neurons have the same premotor inputs as endogenous U1 neurons.

In all experiments where Hb is misexpressed throughout the NB7-1 lineage, it loses its ability to induce U1 neurons over time. There are several possible explanations. First, Hb alone is not sufficient to promote U1 MN identity (Meng et al., 2019). The authors propose a context dependent model, in which Hb promotes neuronal identity in combination with additional temporally regulated gene programs. Second, failure of Hb to transform all neurons in the lineage may be due to loss of NB competency to respond to Hb (Kohwi et al., 2013; Seroka and Doe, 2019). Third, expression of the *NB7-1-Gal4* driver line declines over time (Seroka and Doe, 2019), such that there may be insufficient Hb levels late in the lineage. Anyone, or all, of these mechanisms may be occurring.

Hb also specifies early-born MN connectivity in the NB3-1 lineage. NB3-1 produces four “Raw Prawn” (RP) MNs in the sequence of RP1, RP4, RP3, and RP5 (Tran and Doe, 2008); these neurons connect with ventral muscles VL1-4 (Landgraf et al., 1997). Similar to NB7-1, prolonged expression of Hb in NB3-1 resulted in an increase in RP1/4 early-born Hb+ MNs with functional synaptic connections to muscles VL1 and VL2 (Meng

Author Manuscript Author Manuscript Author Manuscript Author Manuscript

et al., 2020). However, electrophysiology did not show an increased response in muscle stimulation. Upon further observation, animals with ectopic RP1/4 neurons appeared to release more synaptic vesicles compared to controls, but showed a decrease in postsynaptic receptor sensitivity, measured by miniature-EPSP (mEPSP) amplitude (Meng et al., 2020). This result provides a clear example of how homeostatic compensation during development allows for near-normal muscle responses to generate wild-type behavior.

Hb is not the only TTF to specify neuronal identity in embryonic type I NB lineages. Misexpression of Pdm alone in NB7-1 results in an extended Pdm/Cas window and the corresponding increase in U5 neurons (Grosskortenhaus et al., 2006; Meng et al., 2020). Surprisingly, there were regional differences in the response to Pdm misexpression: in segments A1-A3 there were an increased number of U5 neurons only, whereas in segments A4-A7 there was a lack of the U3 Kr+ neuron. It is tempting to propose that ectopic Pdm created a Kr/Pdm window that generated a VO neuron rather than a U3 neuron (see below for more details). Interestingly, segments with increased U5 MNs showed a significant increase in synaptic branching to muscle LL1, but all other muscles showed no change in synapse branching number. Synapses of muscle LL1 were also shown to be functionally connected, visualized by post-synaptic responses to spontaneous synaptic vesicle release in MNs. In addition, hemisegments lacking U3 had a significant decrease in the number of synapses to muscle DA2 (Meng et al., 2020). These results are evidence that, similar to the function of Hb, Pdm temporal identity promotes neuromuscular specificity, directing LL1 muscle targeting to form functional connections and may generate ectopic VO MNs at the expense of U3 Kr+ neurons.

Individual embryonic TTFs have been assayed by both loss- and gain-of-function experiments, yet there are additional examples where the overlap of two TTFs creates a unique neuronal identity. First, the combination of Pdm/Cas in the NB7-1 gives rise to the U5 neuron (Grosskortenhaus et al., 2006). Misexpression of Pdm on top of the endogenous Cas window creates an extended Pdm/Cas window of NB expression that leads to additional U5 neurons (Grosskortenhaus et al., 2006). More recently, the identification of a Kr/Pdm+ GMC in the NB7-1 lineage has led to the discovery of a previously undiscovered Kr/Pdm+ neuron, termed the VO neuron (Averbukh et al., 2018; Seroka et al., 2020). Unlike U1-5 neurons, the VO MN has an Eve− Nkx6+ Zfh1+ molecular identity (Seroka et al., 2020). VO dendrites remain ipsilaterally and axonal projections travel the intersegmental nerve d branch (ISNd) and target ventral oblique muscles, VO4-6. Interestingly, VO does not share similar dendrite projections or postsynaptic localization with U3 or U4 within the neuropil. This discovery shows that NB7-1 produces both Eve+ MNs projecting to dorsal/lateral muscles and a Nkx6+ ventral projecting neuron. To determine if Kr/Pdm combinatorial temporal identity promotes VO muscle targeting, Kr/Pdm were co-misexpressed in the NB7-1 lineage. Co-misexpression resulted in the generation of U1/U2 Hb+ and U3 Kr+ neurons, as expected, plus an increase of 2-3 Nkx6+ Zfh1+ VO neurons at the expense of later-born U4/U5 neurons. Using multi-color flip out (MCFO) (Nern et al., 2015), two individually labeled HA and V5 tagged neurons were shown to target the ventral oblique muscles through the ISNd, proving that the ectopic VO neurons were not just molecularly transformed but also morphologically transformed (Seroka et al., 2020). The functional properties of the ectopic VO neurons await investigation. This is a strong example of how

Author Manuscript Author Manuscript Author Manuscript Author Manuscript

combinatorial expression of the TTFs, Kr and Pdm, function to define temporal identity and promote neuromuscular targeting.

2.3 Downstream effectors of temporal transcription factors

Temporal transcription factors are expressed transiently, leading to a model in which TTFs drive expression of downstream TFs that consolidate and maintain neuronal identity. However, until recently, scant evidence in the *Drosophila* VNC supported this model. Recent work has provided support for this model in the specification of the VO motor neuron. The neuron develops from the Kr/Pdm double positive temporal window, and this TTF combination is necessary and sufficient for the expression of the homeodomain TF Nkx6 (Flybase: HGTX). Interestingly, similar to Kr/Pdm misexpression, misexpression of Nkx6 in NB7-1 resulted in production of ectopic VO MNs at the expense of U3-U5 neurons (Seroka and Doe, 2019). Complementing these findings, Nkx6 RNAi knockdown resulted in a loss of VO neurons and an additional Eve+ neuron. Nkx6 knockdown also showed a complete loss of neuron projections through the ISNd to the ventral oblique muscle (Seroka et al., 2020). These findings, together with Kr/Pdm manipulations discussed above, provide strong support for the model whereby transient TTFs drive expression of homeodomain TFs that establish and maintain neuronal identity. It is likely that Eve and Nkx6 function similarly: the former acting with co-factors to establish unique U1-U5 neuron identity, while the latter acting alone to specify the single VO motor neuron identity (Seroka et al., 2020). In each case there is accumulating evidence that the TTF/homeodomain TFs function to not only specify molecular identity but also higher order properties such as neuronal projections, synapse localization, and connectivity. These conclusions are based on the role of TTF/TFs in motor neurons; it remains to be seen if a similar mechanism is used to drive higher order properties of interneurons.

3.0 Type I neuroblasts in the optic lobe

3.1 Neurogenesis and identification of TTF cascade in the optic lobe

In addition to the VNC, the *Drosophila* optic lobe (OL) provides a powerful model for understanding the contribution of developmental specification programs to the morphological and connectivity features of mature post-mitotic neurons. The OL is comprised of four distinct regions: the lamina, medulla, lobula and lobula plate (Egger et al., 2007; Li et al., 2013; Yasugi et al., 2008). These structures are derived from two primary regions of the OL: the superficially located outer proliferation center (OPC) which gives rise to the neurons of the lamina and medulla, and the inner proliferation center (IPC) which generates the lobula and lobula plate neurons (Apitz and Salecker, 2014; Hofbauer and Campos-Ortega, 1990). Additionally, a specialized region at the tips of the OPC (tOPC) uses Notch-dependent mechanisms to contribute a subset of neurons to the medulla, lobula and lobula plate (Bertet et al., 2014).

Each medulla NB generates a set of postmitotic neurons which are arranged by birth-order in a linear and radial orientation. Investigation of the developmental determinants producing this arrangement initially revealed six candidate TTFs sequentially expressed: Homothorax (Hth) > Klumpfuss (Klu) > Eyeless (Ey) > Sloppy paired 1/2 (Slp) > Dichaete (D) > Tailless

Author Manuscript Author Manuscript Author Manuscript Author Manuscript

(Tll). These TTFs determine the downstream expression of previously characterized TFs in concentric rings of mature OL neurons (Li et al., 2013; Suzuki et al., 2013)(Figure 2A). More recently, Konstantinides et al. and Zhu et al. performed single-cell sequencing of OL cells to determine the TTF cascade in these lineages with higher resolution. They demonstrate that most TTFs are expressed in overlapping windows to create combinatorial codes, which could specify neuronal identity. They uncovered 12 putative TTF windows that, when combined with five spatial patterning domains and Notch-dependent hemilineage diversification, would be sufficient to generate the roughly 120 cell types in the medulla (Konstantinides et al., 2021; Zhu et al., 2022). As seen in the VNC, the OL also uses a $Notch^{ON/OFF}$ mechanism to further diversify each lineage into hemilineages with unique features: for example, about half of the neurons born during the Ey window maintain Ey expression, while the other half are Ey-/Apterous+ (Ap). In mutants for *Suppressor of Hairless* (*SuH*), the transcriptional effector of Notch signaling, all the neuronal progeny of the Ey window are converted to an Ey+ identity, with complete loss of Ap expression. Overall, the combined action of the spatial, TTF cascade, and Notch-dependent signaling generate remarkable diversity in the OL, in parallel to the function of these mechanisms in the VNC (Li et al., 2013; Mark et al., 2021; Suzuki et al., 2013).

Neuronal progeny arising from medulla NBs are organized in a “beads on a string” arrangement in which the youngest columns of neurons are located close to the OPC neuroepithelium. Birth of newer neurons displaces older neurons to more medial locations adjacent to the central brain. Additionally, within each column the youngest neurons are located next to their NBs at the superficial surface of the medulla cortex, while the oldest neurons are pushed deeper towards the neuropil (Apitz and Salecker, 2014; Hasegawa et al., 2011; Morante et al., 2011). This spatial orientation results in the arrangement of neuron subtypes expressing TF combinations corresponding with birth-order in concentric rings within the medulla cortex, and allows for the simultaneous observation of NBs at different temporal stages in their lineage progression (Hasegawa et al., 2011). In the next section, we will explore evidence showing that these mechanisms not only generate diversity, but also specify higher-order neuronal features and contribute to circuit formation.

3.2 Specification of neuronal morphology and targeting by temporal patterning

Landmark studies support a role for the OL TTFs in specifying higher-order features of neuronal identity, such as morphology and connectivity. For example, the TTF Hth drives expression of the homeodomain TF Bsh, which in the $Notch^{ON}$ hemilineage is necessary and sufficient to specify Mi1 neuron morphology: in *bsh* mutant MARCM clones the majority of neurons are converted from Mi1 local interneurons arborizing at the M1, M5 and M9-10 layers of the medulla to Tm-type projection neurons which arborize in both the medulla and lobula (Hasegawa et al., 2013). Conversely, ectopic expression of Hth in later-born NBs is sufficient to generate ectopic Bsh+ neurons (although there is a competence window in which the NB can respond to this manipulation), and in a Hth/Su(H) double-mutant background, Bsh+ progeny are lost, demonstrating the requirement for both Hth and Notch in the specification of the Bsh+ Mi1 identity (Hasegawa et al., 2011; Li et al., 2013). Further characterization revealed that early medulla NBs produce neurons expressing Drf, Bsh, or Run, depending on birth-order. Overexpression of Bsh using *Drf-Gal4*, to label

Author Manuscript Author Manuscript Author Manuscript Author Manuscript

endogenous Drf+ neurons, results in the generation of ectopic medulla intrinsic neurons that have correct arborizations in the M1, M5 and M9-10 layers, however these arborizations are not wildtype. Dual overexpression of Bsh and Hth is required to generate Mi1 neurons with wildtype arborization, not accomplishable by Hth overexpression alone. Additionally, both Hth and Bsh contribute to the regulation of Ncad expression in Mi1 neurons, which plays an important regulatory role in the correct formation of Mi1 arborizations (Hasegawa et al., 2013, 2011; Morante and Desplan, 2008). Together, these data paint a picture of a regulatory hierarchy in which the Hth TTF window gives rise to Bsh+ Mi1 neuron identity, morphology, and targeting of which is specified by the coordinate function of Hth and Bsh.

The specification of T1 neuron morphology is another example within the medulla. The specification of neuronal identity is accomplished through combinatorial TF action downstream of temporal patterning in the NB (Naidu et al., 2020). T1 neurons are born from the Notch^{OFF} hemilineage of the D temporal identity window and are distinguishable from other neurons by a combinatorial code of three TFs expressed in mature T1 neurons and not in their parental NBs: Ocelliless (Oc), Sox102F and Ets65A (Naidu et al., 2020). How does expression of these TFs in T1 neurons relate to the temporal patterning axis? Oc+ Notch^{OFF} neurons are born from the Ey TTF window and continue to be generated through the Slp and D windows, while Sox102F+ neurons are derived from the Slp and D windows and Ets65A+ neurons are born in the D and Tll windows (Figure 2A). The TTFs Ey, Slp and D are required to initiate the expression of Oc, Sox102F and Ets65A, respectively. For example, *ey* RNAi in the NB results in the loss of Oc+ neurons across all windows, Sox102F+ neurons are lost in *slp* mutant clones, and Ets65A+ neurons are lost in *D* mutant clones (Naidu et al. 2020). This developmental program results in the overlap of Oc, Sox102F and Ets65A expression in the neuronal progeny of the D window and results in the T1 identity (Figure 2A). T1 neurons are unicolumnar and connect the lamina and medulla, with cell bodies located in the medulla and characteristic “T” shaped axon branches. CRISPR-mediated knockdown of each of these TFs in T1 neurons impacts different aspects of connectivity and morphogenesis. In an *oc*-CRISPR background, T1 neurons have disorganized arborizations in the medulla while their axon projections still target the lamina, similar to wildtype. Loss of Oc does not affect Sox102F expression. Loss of Sox102F causes overexpansion of T1 medulla arborizations and eliminates wildtype axon projections to the lamina without affecting Oc expression. Lastly, loss of Ets65A causes projections to overextend to the M6 layer without affecting either Sox102F or Oc expression. These results suggest a mechanism similar to the combinatorial codes identified in *C. elegans*, in which distinct TFs act in a combinatorial fashion to specify different aspects of morphology and targeting (Hobert and Kratsios, 2019; Naidu et al., 2020). Taken together, these results support a model in which temporal patterning in OL NBs activates the expression of specific TF combinations that specify the morphology and targeting of neuronal progeny.

The role of temporal patterning in specifying connectivity in the OL is not limited to the medulla. Another example of hierarchical temporal regulation of morphological and connective features is found in the role of Dac and Ato in specifying T4/T5 lobula neuron identities derived from the IPC. IPC NBs give rise to two different neuronal subtypes, C/T and T4/T5, utilizing a truncated TTF cascade (Figure 2B). In the IPC, D and Tll expression define the early and late stages of neurogenesis, respectively. Young IPC NBs give rise

Author Manuscript Author Manuscript Author Manuscript Author Manuscript

to C/T neurons in the D window before switching to Tll expression, which upregulates the pro-neural proteins Ato and Dac to specify T4/T5 progeny (Apitz and Salecker, 2015; Mora et al., 2018). Generation of single-cell clones using IPC-specific *ato-Gal4* revealed that Ato+ NBs give rise to two distinct subtypes of direction selective neurons: the T4 and T5 neurons. Dendrites of T4 and T5 arborize within medulla layers 10 and Lo1, respectively, whereas axons project to one of four lobula plate layers (Apitz and Salecker, 2018; Hofbauer and Campos-Ortega, 1990; Oliva et al., 2014). The function of Dac in the specification of T4/T5 identities was tested using a Dac MARCM approach, demonstrating that in the absence of Dac, T4/T5 neurons are converted to a T2/T3 morphology, with altered dendritic localization to medulla layer M9, and axons targeting lobula layers 2 and 3. Simultaneous knockdown of Dac and Ato resulted in complete absence of T4/T5 identities (Apitz and Salecker, 2018). Examination of Ato mutants in the IPC reveals that Ato is not required for neurogenesis, as Ato+ NBs still give rise to neurons, however, Ato mutant neurons show severe morphological and connectivity defects (Oliva et al., 2014). These results suggest that Ato and Dac are expressed in the Tll window of IPC NBs, where they act to specify higher-order features of the T4/T5 lobula neurons.

How does Dac/Ato function downstream of the Tll window in IPC NBs to specify the complex properties of the T4/T5 direction selective neurons? In order to identify TFs that instruct these mature morphological properties, Schilling et al. performed an RNAi screen against known TFs expressed in T4/T5 neurons, using optomotor response as an output. RNAi against either SoxN or Sox102F resulted in a severely disrupted optomotor response, implicating these factors in the function of the T4/T5 neurons, although their expression was only detected in T4/T5 neurons themselves and not in their progenitor populations. In a SoxN RNAi background T4/T5 dendrites overextended into ectopic medulla layers and showed disrupted axon targeting, demonstrating a regulatory role for these genes in specifying targeting and connectivity (Schilling et al., 2019). To determine whether these genes play a ubiquitous or cell-type specific role in the development of T4/T5 neurons, SoxN and Sox102F were knocked down in specific subsets of T4/T5s: T4a-d, T4/T5ab and T5cd, showing autonomous defects in each subtype. These guidance defects are shown to be dependent on the regulation of the adhesion molecule, Connectin, by the Sox family TFs via two distinct mechanisms. First, SoxN is required for Sox102F expression which suppresses Connectin expression. Second, SoxN is required for Connectin expression in a Sox102F-independent manner (Schilling et al., 2019). Lastly, the combined action of Ato and Dac in late IPC progenitors ensures the downstream expression of SoxN/Sox102F and thus correct target selection based on Connectin expression levels. Taken together, the results of these studies suggest hierarchical regulation of terminal neuronal features by temporal patterning events in their respective progenitors. In the case of T4/T5 neurons, IPC NBs enter a late temporal window triggered by Tll-mediated silencing of the D window, and activation of Dac and Ato in the NB. The coordinate action of Dac and Ato activates the downstream TF effectors SoxN and Sox102F, which in turn regulate levels of the cell-surface protein, Connectin, and ensure proper axon and dendrite connectivity in each T4/T5 subtype. Although this is one example of a linear pathway, it is likely that the TTFs at the top of the regulatory hierarchy generate TF combinations that regulate neuron-specific cellular machinery necessary to ensure proper connectivity. Interestingly, previous work

Author Manuscript Author Manuscript Author Manuscript Author Manuscript

identified a role of another Sox family TF, SoxD, in the neurite targeting of T4/T5 neurons (Contreras et al., 2018), suggesting that multiple Sox family proteins might coordinate in a molecular code to ensure proper wiring.

To further understand the hierarchical regulation of complex morphological features of visual system neurons, a comprehensive understanding of how TTFs regulate downstream effector genes is required. The advent of single-cell RNA sequencing has allowed for an unprecedented ability to profile gene expression in distinct cell types. Application of this approach to understand how the eight T4/T5 neuron subtypes are transcriptionally established over time supports a model in which TFs specify a combinatorial code of downstream effectors in each cell type. Single-cell sequencing of T4/T5 neurons reveals that separate transcriptional programs correspond to specific features of the wiring process. Common T4/T5 features are established by a combination of TFs expressed in all eight subtypes (Lim1, Drgx, Acj6), manipulation of these factors results in gross defects to all T4/T5 dendrite and axon morphology (Kurmangaliyev et al., 2020, 2019). This overall genetic program is diversified by feature-specific transcriptional programs, with separate pathways regulating axon and dendrite specification. All T4/T5 neurons share a common function and general morphology but can be further divided into eight distinct subtypes based on their axonal targeting to the layers a-d of the lobula plate (T4a-d and T5a-d subtypes). Distinct TFs regulate the axon targeting of each of these subtypes to the appropriate layer in the lobula plate in two steps. First, binary expression of the TF, Bifid, directs T4/T5 axons to the general region of the a/b or c/d layers. Second, binary expression of Grain directs T4/T5 axons to individual target layers a and b, or c and d. Perturbation of Bifid or Grain selectively disrupts each lamination step while other common features of T4/T5 morphology are unaffected. Additionally, T4 neurons receive dendritic input in the medulla while T5 neurons receive inputs in the lobula. This choice appears to be determined by the binary expression of the Tfap-2 TF (Kurmangaliyev et al., 2020, 2019). Each of these programs is characterized by a specific code of TFs as well as cell-surface proteins, with further analysis demonstrating unique downstream codes of immunoglobulin (Ig) superfamily proteins in each T4/T5 subtype (Kurmangaliyev et al., 2020, 2019). These modular programs support a model in which TTFs sit at the top of the hierarchy, activating separate combinatorial codes of downstream TFs in their progeny to regulate separate aspects of morphology and connectivity.

4.0 Conservation of embryonic temporal transcription factors from fly to mouse

It has been known for many decades that individual mammalian retinal and neocortical progenitors produced a diversity of neurons and glia in a stereotyped order (Angevine and Sidman, 1961; Livesey and Cepko, 2001). Cell culture experiments showed that the temporal sequence of neurons and glia could be generated in vitro, suggesting a lineage-intrinsic component to the process (Shen et al., 2006). Yet the identification of molecular mechanisms underlying this process of mammalian temporal patterning remained unknown. The first TTF cascade to be characterized was the Hb>Kr>Pdm>Cas series found in most embryonic VNC NBs (see above), making these TFs excellent candidates for specifying

Author Manuscript Author Manuscript Author Manuscript Author Manuscript

temporal identity in the mammalian retina and cortex. This line of research was delayed, however, by the fact that each *Drosophila* TTF is related to an expanded gene family in mammals: Hb is related to the Ikaros family; Kr is equally related to dozens of Zn finger TFs, the tandem Pdm proteins are related to many POU domain TFs, and Cas is related to many Zn finger TFs.

The first breakthrough came when one of the Ikaros family members, Ikzf1 (aka Ikaros), was shown to be necessary and sufficient for specifying early-born retinal cell types (Elliott et al., 2008). Ikzf1 mutants had reduced number of early-born retinal ganglion cells (RGCs), horizontal cells (HCs), and Amacrine cells (AM); misexpression of Ikzf1 gave the opposite phenotype of ectopic early-born cell types at the expense of later-born cell types, such as bipolar neurons (BI) (Elliott et al., 2008). Viral tracing showed that Ikzf1+ retinal progenitor cells (RPCs) produced both early-born and late-born cell types, ruling out the possibility of dedicated progenitors for early- and late-born cell types (Elliott et al., 2008). Several years later similar results were observed for Ikzf1 in specifying early-born cortical neurons (Alsio et al., 2013). Ikzf1 was detected in ventricular zone progenitors (VZPs) as they produced early-born deep layer cell types; interestingly Ikzf1 was not detected in neurons themselves, but this role was likely taken by the closely related Ikzf2 (aka Helios) protein which is specifically detected in the deep layer 6 neurons (Alsio et al., 2013). Cre-induced tracing of Ikzf1+ VZP progeny showed that they produced both early- and late-born cell types, similar to retinal progenitors, and showing that VZPs transition from an Ikzf1+ to Ikzf1− profile (Alsio et al., 2013). Surprisingly, Ikzf1 mutants had no effect on cortical cell identities, although compensation by Ikzf2 may occur and the Ikzf1/Ikzf2 double mutant may be needed to determine the full loss of function phenotype. Conversely, Ikzf1 misexpression resulted in ectopic early-born deep layer neurons (Ctip2+ Tbr1+ Foxp2+) at the expense of later-born superficial layer neurons (Satb2+ Brn2+ Cux1+), although misexpression of Ikzf1 at late stages of cortical neurogenesis had no effect, showing that there is a limited competence window to respond to Ikzf1 (Alsio et al., 2013).

Taken together, these studies reveal a remarkable conservation of function between fly Hb and mammalian Ikaros family members. In both systems: (1) the TTF is expressed transiently in progenitors while they produce early-born cell types; (2) the TTF is necessary and sufficient for specifying early-born cell types; (3) there is a limited competence window to respond to the TTF.

The second ortholog to a fly TTF to be characterized was Casz1, an ortholog of the late TTF, Castor (Mattar et al., 2015). There are two isoforms Casz1v1 and Casz1v2. Casz1 isoforms are expressed in RPCs at increasing levels from E14.5 to P0, when late-born cell types are generated. Loss of function of both isoforms via mouse conditional mutant or retroviral clones showed a decrease in late-born rods and a corresponding increase in earlier-born HCs, AMs, and cones. Conversely, overexpression resulted in an increase in rod (Casz1v2) or BI numbers (Casz1v1) (Mattar et al., 2015). More recently the same group has shown that Casz1 has physical and genetic interactions with the NuRD complex (Mattar et al., 2021), known to promote epigenetic gene silencing, and that the NuRD complex histone deacetylase function is necessary for Casz1 function (Mattar et al., 2021). For example, Casz1 overexpression decreases rods, as mentioned above, but addition of

Author Manuscript Author Manuscript Author Manuscript Author Manuscript

the histone deacetylase inhibitor TSA will prevent Casz1-induced ectopic rod formation; furthermore, CRISPR knockdown of key NuRD complex members mimics the Casz1 loss of function phenotype of reduced rod numbers (Mattar et al., 2021). Taken together, fly Cas and mouse Casz1 have highly similar roles in the specification of late-born neuronal identity. For several years, Ikzf1 and Casz1 were the only two orthologs of fly TTFs, and they provided 'book ends' as early and late TTFs, respectively -- leaving open the question of what comes between them.

More recently, two additional TTFs have been discovered to play a role in the middle stages of retinal neurogenesis following Ikzf1 and preceding Casz1. The first, Foxn4 is expressed in retinal progenitors at the time of middle-born neuron production: HCs, AMs, cones, and rods -- but not late-born BIs or Müller glia (Liu et al., 2020). Interestingly, the Drosophila ortholog of Foxn4 called Jumu is required in several embryonic neuroblast lineages to specify cell identities (Cheah et al., 2000), although it has not been tested for a role in temporal patterning. Loss of function for Foxn4 results in increased early-born retinal ganglion cells (RGCs) and loss of subsequent cell types (HCs, AMs, cones) as well as transient loss of rods. Conversely, misexpression of Foxn4 results in fewer RGCs and increased number of HCs, cones, and rods (Liu et al., 2020). Similar to *Drosophila* TTF cross-regulation, Foxn4 activates the next TTF, Casz1, and represses the previous TTF, Ikzf1 (Liu et al., 2020). The second TTF to be recently characterized is actually a pair of POU domain TFs Pou2f1/2 (formerly Oct-1/2), which are orthologs of the fly middle-born TTF Pdm. Recent work from the Cayouette lab has shown that Pou2f1/2 proteins are detected in RPCs during the middle stages of neurogenesis (E11.5-E15.5) and maintained in mid-born cones, HCs and AMs (Javed et al., 2020). Overexpression by electroporation resulted in an increase in cone numbers. Reducing Pou2f1/2 levels by RNAi, CRISPR gene lesioning, or Cre-induced conditional knock out effectively decreased Pou2f1/2 protein levels and reduced cone number while increasing late-born rod numbers (Javed et al., 2020). Furthermore, the authors show that the early TTF, Ikzf1, activates Pou2f1/2 expression, and Pou2f1/2 represses the late TTF Casz1 (Javed et al., 2020). This is somewhat different from the cross-regulatory hierarchy in *Drosophila*, in which Pdm promotes Cas expression (Grosskortenhaus et al., 2006; Tran and Doe, 2008).

The results summarized above show that the mammalian cortex and retina both use orthologs of fly VNC TTFs to generate temporal identity using remarkably similar mechanisms, although see (Sagner et al., 2021). It remains unclear whether this reflects a deep evolutionary relationship, or the more recent convergence of gene expression patterns. Despite the recent progress, many questions remain. (1) What is the relationship between Pou2f1/2 and Foxn4 in specifying "middle" temporal identity? Perhaps Pou2f1/2 act as "subtemporal" factors to subdivide the broader Foxn4 expression window. (2) The fly TTF Kr is equally related to dozens of mammalian Zn finger TFs; which, if any, of these TFs may play a role in specifying temporal identity following Ikzf1? High temporal resolution single cell RNA-sequencing (Clark et al., 2019) may provide the best candidates from this broad TF population. (3) Casz1 is a TTF in the retina, but is not expressed in the developing cortex. What takes its place as a late TTF in the cortex? (4) How does Casz1v1 induce BPs, whereas Casz1v2 induce rods? (5) Both fly and mouse TTFs are transiently expressed; what maintains neuronal identity after the TTFs are gone? (6) Fly spatial TFs alter the epigenome

Author Manuscript Author Manuscript Author Manuscript Author Manuscript

to bias TTF genomic access and function (Sen et al., 2019), whereas mouse Casz1 alters the epigenome (Mattar et al., 2021), which may bias spatial TF binding and function; does each organism integrate spatial and temporal TFs differently? or might both spatial and temporal TFs act by altering the epigenome, helping to create distinct, heritable chromatin landscapes for each neural subtype? Recently there has been rapid progress in the field of temporal patterning in both flies and mice, so the answers to the questions above should soon arrive.

Acknowledgements

We thank Chundi Xu for comments on the manuscript. Funding was provided by T32 GM007413 (HQP), T32 HD007348 (AQS), and HHMI (CQD).

References

Alsio JM, Tarchini B, Cayouette M, Livesey FJ. 2013. Ikaros promotes early-born neuronal fates in the cerebral cortex. Proc Natl Acad Sci U S A 110:E716–25. doi:10.1073/pnas.1215707110 [PubMed: 23382203]

Angevine JB, Sidman RL. 1961. Autoradiographic study of cell migration during histogenesis of cerebral cortex in the mouse. Nature 192:766–768. doi:10.1038/192766b0

Apitz H, Salecker I. 2018. Spatio-temporal relays control layer identity of direction-selective neuron subtypes in Drosophila. Nat Commun 9:2295. doi:10.1038/s41467-018-04592-z [PubMed: 29895891]

Apitz H, Salecker I. 2015. A region-specific neurogenesis mode requires migratory progenitors in the Drosophila visual system. Nat Neurosci 18:46–55. doi:10.1038/nn.3896 [PubMed: 25501037]

Apitz H, Salecker I. 2014. A challenge of numbers and diversity: neurogenesis in the Drosophila optic lobe. J Neurogenet 28:233–49. doi:10.3109/01677063.2014.922558 [PubMed: 24912777]

Averbukh I, Lai S-L, Doe CQ, Barkai N. 2018. A repressor-decay timer for robust temporal patterning in embryonic Drosophila neuroblast lineages. eLife 7:e38631. doi:10.7554/eLife.38631 [PubMed: 30526852]

Benito-Sipos J, Estacio-Gomez A, Moris-Sanz M, Baumgardt M, Thor S, Diaz-Benjumea FJ. 2010. A genetic cascade involving klumpfuss, nab and castor specifies the abdominal leucokinergic neurons in the Drosophila CNS. Development 137:3327–36. doi:137/19/3327 [pii] 10.1242/dev.052233 [PubMed: 20823069]

Bertet C, Li X, Erclik T, Cavey M, Wells B, Desplan C. 2014. Temporal patterning of neuroblasts controls Notch-mediated cell survival through regulation of Hid or Reaper. Cell 158:1173–86. doi:10.1016/j.cell.2014.07.045 [PubMed: 25171415]

Bossing T, Udolph G, Doe CQ, Technau GM. 1996. The embryonic central nervous system lineages of Drosophila melanogaster. I. Neuroblast lineages derived from the ventral half of the neuroectoderm. Dev Biol 179:41–64. doi:S0012-1606(96)90240-7 [pii] 10.1006/dbio.1996.0240 [PubMed: 8873753]

Brody T, Odenwald WF. 2000. Programmed transformations in neuroblast gene expression during Drosophila CNS lineage development. Dev Biol 226:34–44. doi:10.1006/dbio.2000.9829 S0012-1606(00)99829-4 [pii] [PubMed: 10993672]

Cheah PY, Chia W, Yang X. 2000. Jumeaux, a novel Drosophila winged-helix family protein, is required for generating asymmetric sibling neuronal cell fates. Dev Camb Engl 127:3325–3335. doi:10.1242/dev.127.15.3325

Clark BS, Stein-O'Brien GL, Shiau F, Cannon GH, Davis-Marcisak E, Sherman T, Santiago CP, Hoang TV, Rajaii F, James-Esposito RE, Gronostajski RM, Fertig EJ, Goff LA, Blackshaw S. 2019. Single-Cell RNA-Seq Analysis of Retinal Development Identifies NFI Factors as Regulating Mitotic Exit and Late-Born Cell Specification. Neuron 102:1111–1126.e5. doi:10.1016/j.neuron.2019.04.010 [PubMed: 31128945]

Author Manuscript Author Manuscript Author Manuscript Author Manuscript

Contreras EG, Palominos T, Glavic Á, Brand AH, Sierralta J, Oliva C. 2018. The transcription factor SoxD controls neuronal guidance in the Drosophila visual system. Sci Rep 8:13332. doi:10.1038/s41598-018-31654-5 [PubMed: 30190506]

Doe CQ. 2017. Temporal Patterning in the Drosophila CNS. Annu Rev Cell Dev Biol 33:in press.

Egger B, Boone JQ, Stevens NR, Brand AH, Doe CQ. 2007. Regulation of spindle orientation and neural stem cell fate in the Drosophila optic lobe. Neural Dev 2:1. doi:1749-8104-2-1 [pii] 10.1186/1749-8104-2-1 [PubMed: 17207270]

Elliott J, Jolicoeur C, Ramamurthy V, Cayouette M. 2008. Ikaros confers early temporal competence to mouse retinal progenitor cells. Neuron 60:26–39. doi:10.1016/j.neuron.2008.08.008 [PubMed: 18940586]

Grosskortenhaus R, Robinson KJ, Doe CQ. 2006. Pdm and Castor specify late-born motor neuron identity in the NB7-1 lineage. Genes Dev 20:2618–27. doi:10.1101/gad.1445306 [PubMed: 16980589]

Hasegawa E, Kaido M, Takayama R, Sato M. 2013. Brain-specific-homeobox is required for the specification of neuronal types in the Drosophila optic lobe. Dev Biol 377:90–9. doi:10.1016/j.ydbio.2013.02.012 [PubMed: 23454478]

Hasegawa E, Kitada Y, Kaido M, Takayama R, Awasaki T, Tabata T, Sato M. 2011. Concentric zones, cell migration and neuronal circuits in the Drosophila visual center. Development 138:983–93. doi:10.1242/dev.058370 [PubMed: 21303851]

Heckscher ES, Zarin AA, Faumont S, Clark MQ, Manning L, Fushiki A, Schneider-Mizell CM, Fetter RD, Truman JW, Zwart MF, Landgraf M, Cardona A, Lockery SR, Doe CQ. 2015. Even-Skipped(+) Interneurons Are Core Components of a Sensorimotor Circuit that Maintains Left-Right Symmetric Muscle Contraction Amplitude. Neuron 88:314–29. doi:10.1016/j.neuron.2015.09.009 [PubMed: 26439528]

Hobert O, Kratsios P. 2019. Neuronal identity control by terminal selectors in worms, flies, and chordates. Curr Opin Neurobiol 56:97–105. doi:10.1016/j.conb.2018.12.006 [PubMed: 30665084]

Hofbauer A, Campos-Ortega JA. 1990. Proliferation pattern and early differentiation of the optic lobes in Drosophila melanogaster. Rouxs Arch Dev Biol Off Organ EDBO 198:264–274. doi:10.1007/BF00377393

Isshiki T, Pearson B, Holbrook S, Doe CQ. 2001. Drosophila neuroblasts sequentially express transcription factors which specify the temporal identity of their neuronal progeny. Cell 106:511–21. [PubMed: 11525736]

Javed A, Mattar P, Lu S, Kruczek K, Kloc M, Gonzalez-Cordero A, Bremner R, Ali RR, Cayouette M. 2020. Pou2f1 and Pou2f2 cooperate to control the timing of cone photoreceptor production in the developing mouse retina. Dev Camb Engl 147:dev188730. doi:10.1242/dev.188730

Kambadur R, Koizumi K, Stivers C, Nagle J, Poole SJ, Odenwald WF. 1998. Regulation of POU genes by castor and hunchback establishes layered compartments in the Drosophila CNS. Genes Dev 12:246–60. [PubMed: 9436984]

Kanai MI, Okabe M, Hiromi Y. 2005. seven-up Controls switching of transcription factors that specify temporal identities of Drosophila neuroblasts. Dev Cell 8:203–13. doi:10.1016/j.devcel.2004.12.014 [PubMed: 15691762]

Kohwi M, Lupton JR, Lai SL, Miller MR, Doe CQ. 2013. Developmentally regulated subnuclear genome reorganization restricts neural progenitor competence in Drosophila. Cell 152:97–108. doi:10.1016/j.cell.2012.11.049 [PubMed: 23332748]

Konstantinides N, Rossi AM, Escobar A, Dudragne L, Chen Y-C, Tran T, Jaimes AM, Özel MN, Simon F, Shao Z, Tsankova NM, Fullard JF, Walldorf U, Roussos P, Desplan C. 2021. A comprehensive series of temporal transcription factors in the fly visual system. Nature 604:316–322.

Kurmangaliyev YZ, Yoo J, LoCascio SA, Zipursky SL. 2019. Modular transcriptional programs separately define axon and dendrite connectivity. eLife 8:e50822. doi:10.7554/eLife.50822 [PubMed: 31687928]

Kurmangaliyev YZ, Yoo J, Valdes-Aleman J, Sanfilippo P, Zipursky SL. 2020. Transcriptional Programs of Circuit Assembly in the Drosophila Visual System. Neuron 108:1045–1057.e6. doi:10.1016/j.neuron.2020.10.006 [PubMed: 33125872]

Author Manuscript Author Manuscript Author Manuscript Author Manuscript

Landgraf M, Bossing T, Technau GM, Bate M. 1997. The origin, location, and projections of the embryonic abdominal motorneurons of Drosophila. J Neurosci Off J Soc Neurosci 17:9642–9655.

Li X, Erclik T, Bertet C, Chen Z, Voutev R, Venkatesh S, Morante J, Celik A, Desplan C. 2013. Temporal patterning of Drosophila medulla neuroblasts controls neural fates. Nature 498:456–62. doi:10.1038/nature12319 [PubMed: 23783517]

Liu S, Liu X, Li S, Huang X, Qian H, Jin K, Xiang M. 2020. Foxn4 is a temporal identity factor conferring mid/late-early retinal competence and involved in retinal synaptogenesis. Proc Natl Acad Sci U S A 117:5016–5027. doi:10.1073/pnas.1918628117 [PubMed: 32071204]

Livesey FJ, Cepko CL. 2001. Vertebrate neural cell-fate determination: lessons from the retina. Nat Rev Neurosci 2:109–18. doi:10.1038/35053522 [PubMed: 11252990]

Mark B, Lai S-L, Zarin AA, Manning L, Pollington HQ, Litwin-Kumar A, Cardona A, Truman JW, Doe CQ. 2021. A developmental framework linking neurogenesis and circuit formation in the Drosophila CNS. eLife 10. doi:10.7554/eLife.67510

Mattar P, Ericson J, Blackshaw S, Cayouette M. 2015. A conserved regulatory logic controls temporal identity in mouse neural progenitors. Neuron 85:497–504. doi:10.1016/j.neuron.2014.12.052 [PubMed: 25654255]

Mattar P, Jolicoeur C, Dang T, Shah S, Clark BS, Cayouette M. 2021. A Casz1-NuRD complex regulates temporal identity transitions in neural progenitors. Sci Rep 11:3858. doi:10.1038/s41598-021-83395-7 [PubMed: 33594190]

Meng JL, Marshall ZD, Lobb-Rabe M, Heckscher ES. 2019. How prolonged expression of Hunchback, a temporal transcription factor, re-wires locomotor circuits. Elife 8. doi:10.7554/eLife.46089

Meng JL, Wang Y, Carrillo RA, Heckscher E. 2020. Temporal transcription factors determine circuit membership by permanently altering motor neuron-to-muscle synaptic partnerships. eLife 9. doi:10.7554/eLife.56898

Mettler U, Vogler G, Urban J. 2006. Timing of identity: spatiotemporal regulation of hunchback in neuroblast lineages of Drosophila by Seven-up and Prospero. Development 133:429–37. doi:dev.02229 [pii] 10.1242/dev.02229 [PubMed: 16396905]

Mora N, Oliva C, Fiers M, Ejsmont R, Soldano A, Zhang T-T, Yan J, Claeys A, De Geest N, Hassan BA. 2018. A Temporal Transcriptional Switch Governs Stem Cell Division, Neuronal Numbers, and Maintenance of Differentiation. Dev Cell 45:53–66.e5. doi:10.1016/j.devcel.2018.02.023 [PubMed: 29576424]

Morante J, Desplan C. 2008. The color-vision circuit in the medulla of Drosophila. Curr Biol CB 18:553–565. doi:10.1016/j.cub.2008.02.075 [PubMed: 18403201]

Morante J, Erclik T, Desplan C. 2011. Cell migration in Drosophila optic lobe neurons is controlled by eyeless/Pax6. Development 138:687–93. doi:10.1242/dev.056069 [PubMed: 21208993]

Moris-Sanz M, Estacio-Gomez A, Alvarez-Rivero J, Diaz-Benjumea FJ. 2014. Specification of neuronal subtypes by different levels of Hunchback. Development 141:4366–74. doi:10.1242/dev.113381 [PubMed: 25344076]

Naidu VG, Zhang Y, Lowe S, Ray A, Zhu H, Li X. 2020. Temporal progression of Drosophila medulla neuroblasts generates the transcription factor combination to control T1 neuron morphogenesis. Dev Biol 464:35–44. doi:10.1016/j.ydbio.2020.05.005 [PubMed: 32442418]

Nern A, Pfeiffer BD, Rubin GM. 2015. Optimized tools for multicolor stochastic labeling reveal diverse stereotyped cell arrangements in the fly visual system. Proc Natl Acad Sci U A 112:E2967–76. doi:10.1073/pnas.1506763112

Novotny T, Eiselt R, Urban J. 2002. Hunchback is required for the specification of the early sublineage of neuroblast 7-3 in the Drosophila central nervous system. Development 129:1027–36. [PubMed: 11861485]

Oliva C, Choi C-M, Nicolai LJJ, Mora N, De Geest N, Hassan BA. 2014. Proper connectivity of Drosophila motion detector neurons requires Atonal function in progenitor cells. Neural Develop 9:4. doi:10.1186/1749-8104-9-4

Pearson BJ, Doe CQ. 2003. Regulation of neuroblast competence in Drosophila. Nature 425:624–8. doi:10.1038/nature01910 nature01910 [pii] [PubMed: 14534589]

Author Manuscript Author Manuscript Author Manuscript Author Manuscript

Sagner A, Zhang I, Watson T, Lazaro J, Melchionda M, Briscoe J. 2021. A shared transcriptional code orchestrates temporal patterning of the central nervous system. PLoS Biol 19:e3001450. doi:10.1371/journal.pbio.3001450 [PubMed: 34767545]

Schilling T, Ali AH, Leonhardt A, Borst A, Pujol-Martí J. 2019. Transcriptional control of morphological properties of direction-selective T4/T5 neurons in Drosophila. Dev Camb Engl 146:dev169763. doi:10.1242/dev.169763

Schmid A, Chiba A, Doe CQ. 1999. Clonal analysis of Drosophila embryonic neuroblasts: neural cell types, axon projections and muscle targets. Development 126:4653–89. [PubMed: 10518486]

Schmidt H, Rickert C, Bossing T, Vef O, Urban J, Technau GM. 1997. The embryonic central nervous system lineages of Drosophila melanogaster. II. Neuroblast lineages derived from the dorsal part of the neuroectoderm. Dev Biol 189:186–204. doi:S0012160697986607 [pii] [PubMed: 9299113]

Sen SQ, Chanchani S, Southall TD, Doe CQ. 2019. Neuroblast-specific open chromatin allows the temporal transcription factor, Hunchback, to bind neuroblast-specific loci. Elife 8. doi:10.7554/eLife.44036

Seroka A, Yazejian RM, Lai S-L, Doe CQ. 2020. A novel temporal identity window generates alternating Eve+/Nkx6+ motor neuron subtypes in a single progenitor lineage. Neural Develop 15:9. doi:10.1186/s13064-020-00146-6

Seroka AQ, Doe CQ. 2019. The Hunchback temporal transcription factor determines motor neuron axon and dendrite targeting in Drosophila. Development 137. doi:10.1242/dev.175570

Shen Q, Wang Y, Dimos JT, Fasano CA, Phoenix TN, Lemischka IR, Ivanova NB, Stifani S, Morrisey EE, Temple S. 2006. The timing of cortical neurogenesis is encoded within lineages of individual progenitor cells. Nat Neurosci 9:743–51. doi:10.1038/nn1694 [PubMed: 16680166]

Skeath JB, Thor S. 2003. Genetic control of Drosophila nerve cord development. Curr Opin Neurobiol 13:8–15. doi:S0959438803000072 [pii] [PubMed: 12593977]

Sullivan LF, Warren TL, Doe CQ. 2019. Temporal identity establishes columnar neuron morphology, connectivity, and function in a Drosophila navigation circuit. eLife 8. doi:10.7554/eLife.43482

Suzuki T, Kaido M, Takayama R, Sato M. 2013. A temporal mechanism that produces neuronal diversity in the Drosophila visual center. Dev Biol 380:12–24. doi:10.1016/j.ydbio.2013.05.002 [PubMed: 23665475]

Tran KD, Doe CQ. 2008. Pdm and Castor close successive temporal identity windows in the NB3-1 lineage. Development 135:3491–9. doi:10.1242/dev.024349 [PubMed: 18832394]

Urban J, Mettler U. 2006. Connecting temporal identity to mitosis: the regulation of Hunchback in Drosophila neuroblast lineages. Cell Cycle 5:950–2. doi:2727 [pii] [PubMed: 16687926]

Wreden CC, Meng JL, Feng W, Chi W, Marshall ZD, Heckscher ES. 2017. Temporal Cohorts of Lineage-Related Neurons Perform Analogous Functions in Distinct Sensorimotor Circuits. Curr Biol 27:1521–1528.e4. doi:10.1016/j.cub.2017.04.024 [PubMed: 28502656]

Yasugi T, Umetsu D, Murakami S, Sato M, Tabata T. 2008. Drosophila optic lobe neuroblasts triggered by a wave of proneural gene expression that is negatively regulated by JAK/STAT. Development 135:1471–80. doi:10.1242/dev.019117 [PubMed: 18339672]

Zhu H, Zhao SD, Ray A, Zhang Y, Li X. 2022. A comprehensive temporal patterning gene network in Drosophila medulla neuroblasts revealed by single-cell RNA sequencing. Nat Commun 13:1247. doi:10.1038/s41467-022-28915-3 [PubMed: 35273186]

Author Manuscript Author Manuscript Author Manuscript Author Manuscript

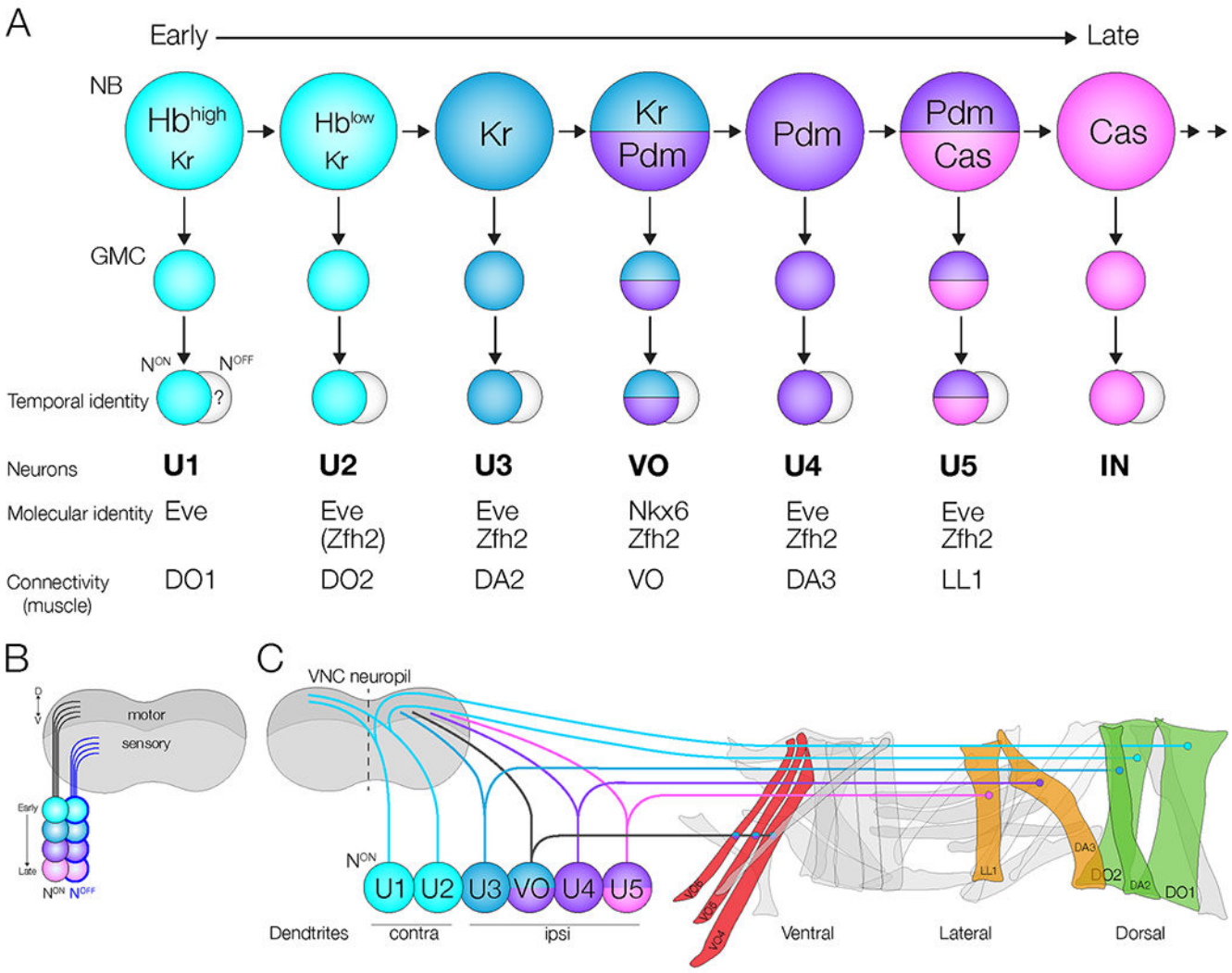

Figure 1. The TTF cascade in type I VNC NBs.

(A) Most VNC NBs sequentially express Hunchback (Hb), Kruppel (Kr), Pdm1/Nubbin and Pdm2 (Pdm), and Castor (Cas). Notch^{ON} neurons are shown on top of Notch^{OFF} neurons.

(B) Hemilineages formed by Notch^{ON} or Notch^{OFF} at the time of GMC division.

(C) Motor neuron axon and dendrite projections in the NB7-1 lineage. See text for details.

Author Manuscript Author Manuscript Author Manuscript Author Manuscript

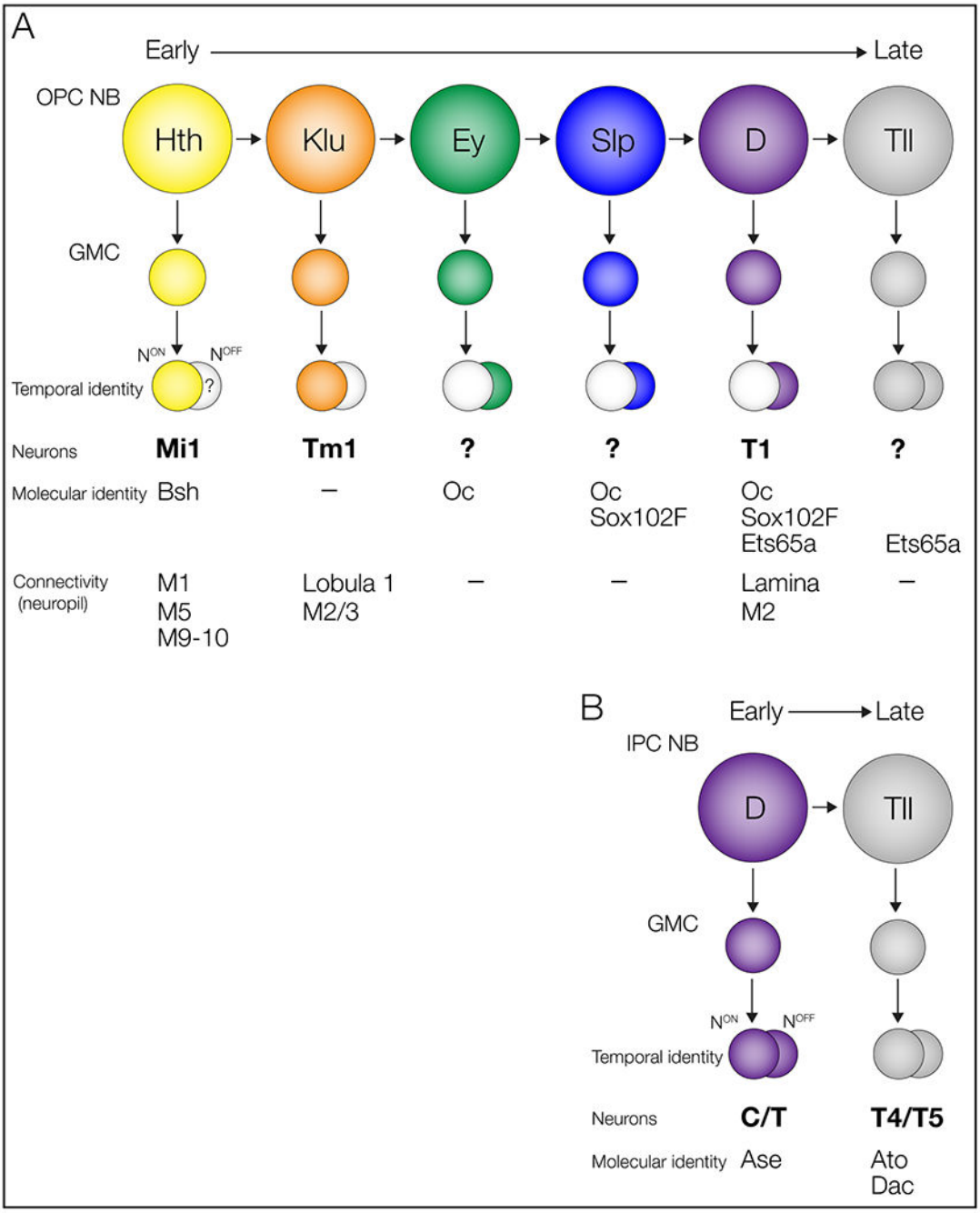

Figure 2. The TTF cascade in type I optic lobe NBs.

(A) OPC medulla NB TTF cascade (*first row*). During each TTF window, the NB gives rise to a GMC which undergoes a Notch-dependent terminal division to generate a pair of neurons or glia (*rows two and three*). Notch^{ON} neurons are shown on top of Notch^{OFF} neurons. Each TTF window generates unique neuronal identities, with key examples listed (*row four*). Molecular identities and target neuropils are listed for the respective neuronal subtypes (*rows five and six*).

Author Manuscript Author Manuscript Author Manuscript Author Manuscript

(B) IPC NB TTF cascade (*first row*). Subsequent rows as in Figure 1. Notch^{ON} neurons are shown on top of Notch^{OFF} neurons.