a.

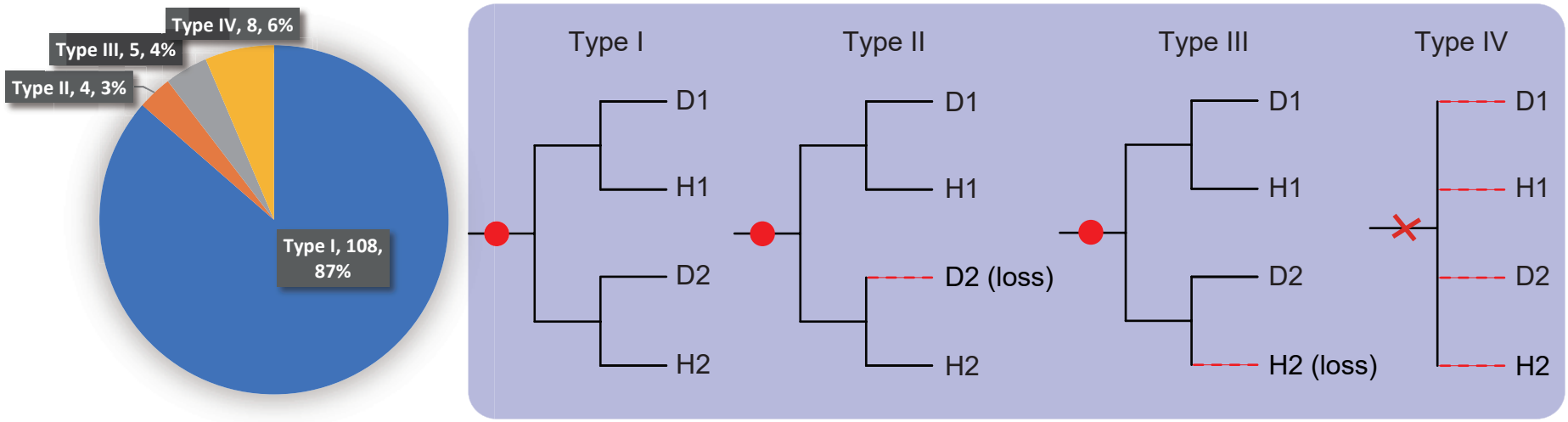
Type IV, 8, 6%
Type III, 5, 4%
Type II, 4, 3%
Type I, 108, 87%
Type I
Type II
Type III
Type IV
D1
H1
D2
H2
D2 (loss)
H2 (loss)

b.

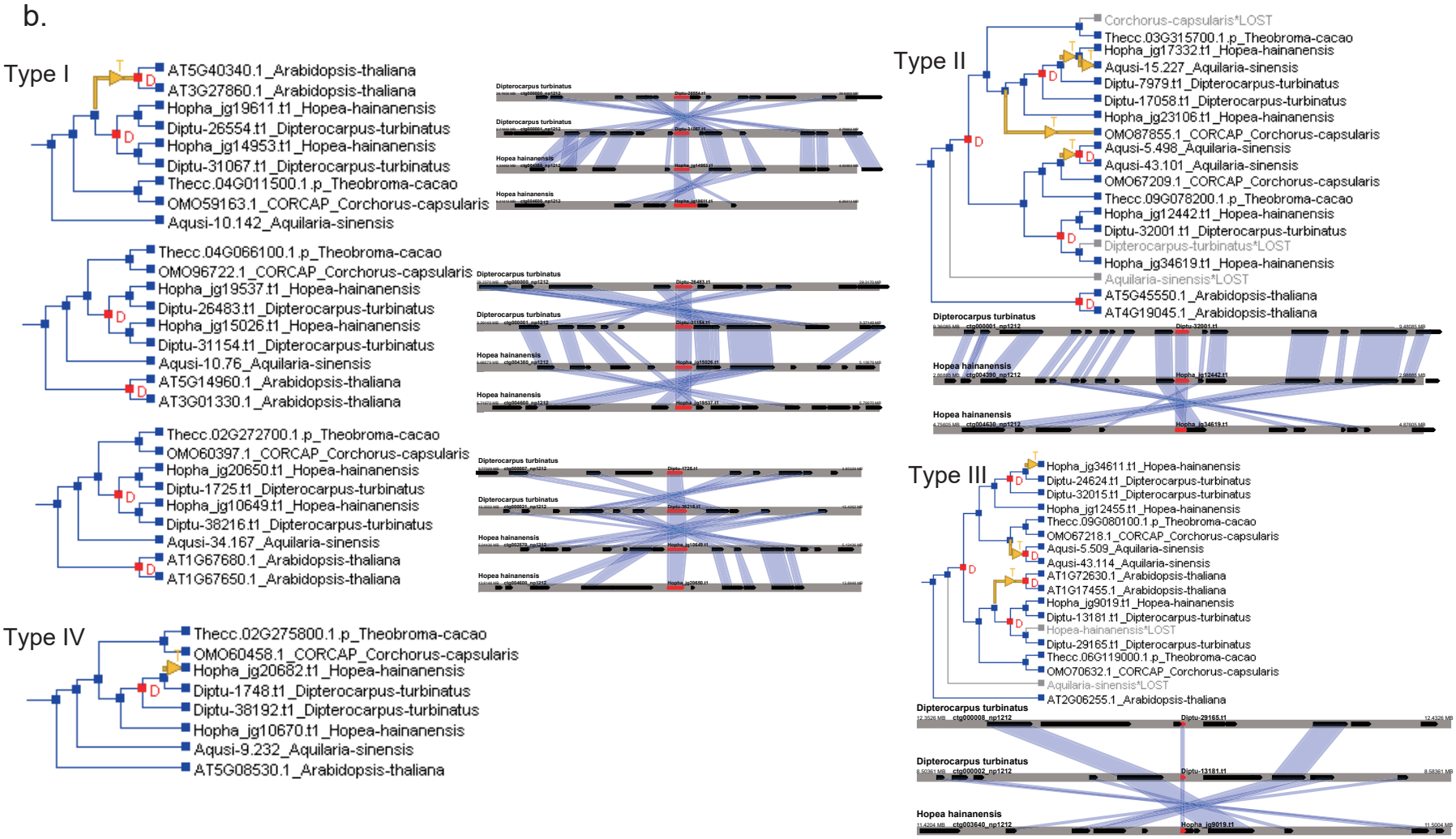
Type I
AT5G40340.1_Arabidopsis-thaliana
AT3G27860.1_Arabidopsis-thaliana
Hopha_jg19611.t1_Hopea-hainanensis
Diptu-26554.t1_Dipterocarpus-turbinatus
Hopha_jg14953.t1_Hopea-hainanensis
Diptu-31067.t1_Dipterocarpus-turbinatus
Thecc.04G011500.1.p_Theobroma-cacao
OMO59163.1_CORCAP_Corchorus-capsularis
Aqusi-10.142_Aquilaria-sinensis
Thecc.04G066100.1.p_Theobroma-cacao
OMO96722.1_CORCAP_Corchorus-capsularis
Hopha_jg19537.t1_Hopea-hainanensis
Diptu-26483.t1_Dipterocarpus-turbinatus
Hopha_jg15026.t1_Hopea-hainanensis
Diptu-31154.t1_Dipterocarpus-turbinatus
Aqusi-10.76_Aquilaria-sinensis
AT5G14960.1_Arabidopsis-thaliana
AT3G01330.1_Arabidopsis-thaliana
Thecc.02G272700.1.p_Theobroma-cacao
OMO60397.1_CORCAP_Corchorus-capsularis
Hopha_jg20650.t1_Hopea-hainanensis
Diptu-1725.t1_Dipterocarpus-turbinatus
Hopha_jg10649.t1_Hopea-hainanensis
Diptu-38216.t1_Dipterocarpus-turbinatus
Aqusi-34.167_Aquilaria-sinensis
AT1G67680.1_Arabidopsis-thaliana
AT1G67650.1_Arabidopsis-thaliana
Type IV
Thecc.02G275800.1.p_Theobroma-cacao
OMO60458.1_CORCAP_Corchorus-capsularis
Hopha_jg20682.t1_Hopea-hainanensis
Diptu-1748.t1_Dipterocarpus-turbinatus
Diptu-38192.t1_Dipterocarpus-turbinatus
Hopha_jg10670.t1_Hopea-hainanensis
Aqusi-9.232_Aquilaria-sinensis
AT5G08530.1_Arabidopsis-thaliana
Type II
Corchorus-capsularis*LOST
Thecc.03G315700.1.p_Theobroma-cacao
Hopha_jg17332.t1_Hopea-hainanensis
Aqusi-15.227_Aquilaria-sinensis
Diptu-7979.t1_Dipterocarpus-turbinatus
Diptu-17058.t1_Dipterocarpus-turbinatus
Hopha_jg23106.t1_Hopea-hainanensis
OMO87855.1_CORCAP_Corchorus-capsularis
Aqusi-5.498_Aquilaria-sinensis
Aqusi-43.101_Aquilaria-sinensis
OMO67209.1_CORCAP_Corchorus-capsularis
Thecc.09G078200.1.p_Theobroma-cacao
Hopha_jg12442.t1_Hopea-hainanensis
Diptu-32001.t1_Dipterocarpus-turbinatus
Dipterocarpus-turbinatus*LOST
Hopha_jg34619.t1_Hopea-hainanensis
Aquilaria-sinensis*LOST
AT5G45550.1_Arabidopsis-thaliana
AT4G19045.1_Arabidopsis-thaliana
Type III
Hopha_jg34611.t1_Hopea-hainanensis
Diptu-24624.t1_Dipterocarpus-turbinatus
Diptu-32015.t1_Dipterocarpus-turbinatus
Hopha_jg12455.t1_Hopea-hainanensis
Thecc.09G080100.1.p_Theobroma-cacao
OMO67218.1_CORCAP_Corchorus-capsularis
Aqusi-5.509_Aquilaria-sinensis
Aqusi-43.114_Aquilaria-sinensis
AT1G72630.1_Arabidopsis-thaliana
AT1G17455.1_Arabidopsis-thaliana
Hopha_jg9019.t1_Hopea-hainanensis
Diptu-13181.t1_Dipterocarpus-turbinatus
Hopea-hainanensis*LOST
Diptu-29165.t1_Dipterocarpus-turbinatus
Thecc.06G119000.1.p_Theobroma-cacao
OMO70632.1_CORCAP_Corchorus-capsularis
Aquilaria-sinensis*LOST
AT2G06255.1_Arabidopsis-thaliana
Dipterocarpus turbinatus
Hopea hainanensis