Supplemental Document

Biomedical Optics EXPRESS

# Prediction of the response to antiangiogenic sunitinib therapy by non-invasive hybrid diffuse optics in renal cell carcinoma: supplement

MIGUEL MIRELES,[1,2,†] GABRIELA JIMÉNEZ-VALERIO,[2,†] JORDI MORALES-DALMAU,[1] JOHANNES D. JOHANSSON,[1,3] MAR MARTÍNEZ-LOZANO,[4] ERNESTO E. VIDAL-ROSAS,[1,5] VALENTÍ NAVARRO-PÉREZ,[6] DAVID R. BUSCH,[7] ORIOL CASANOVAS,[4] TURGUT DURDURAN,[1,8] AND CLARA VILCHES[1,*]

[1] *ICFO - Institut de Ciències Fotòniques, The Barcelona Institute of Science and Technology, 08860 Barcelona, Spain*
[2] *Computational Optics and Translational Imaging Lab, Northeastern University, Boston, Massachusetts 02115, USA*
[3] *Department of Biomedical Engineering, Linköping University, SE-581 83 Linköping, Sweden*
[4] *Tumor Angiogenesis Group, ProCURE, Catalan Institute of Oncology - IDIBELL, 08908 L'Hospitalet de Llobregat, Spain*
[5] *Digital Health and Biomedical Engineering, School of Electronics and Computer Science, University of Southampton, SO17 1BJ Southampton, UK*
[6] *Clinical Research Unit, Institut Català d'Oncologia, 08908 L'Hospitalet de Llobregat, Spain*
[7] *University of Texas Southwestern Medical Center, Departments of Anesthesiology and Pain Management, Neurology, and Biomedical Engineering Dallas, Texas 75390-9003, USA*
[8] *ICREA - Institució Catalana de Recerca i Estudis Avançats, 08010 Barcelona, Spain*
[†] *These authors contributed equally to this work*
[*] *clara.vilches@icfo.eu*

---

This supplement published with Optica Publishing Group on 6 September 2024 by The Authors under the terms of the Creative Commons Attribution 4.0 License in the format provided by the authors and unedited. Further distribution of this work must maintain attribution to the author(s) and the published article's title, journal citation, and DOI.

Supplement DOI: https://doi.org/10.6084/m9.figshare.26830069

Parent Article DOI: https://doi.org/10.1364/BOE.532052

# PREDICTION OF RESPONSE TO ANTIANGIOGENIC SUNITINIB THERAPY BY NON-INVASIVE HYBRID DIFFUSE OPTICS IN RENAL CELL CARCINOMA: SUPPLEMENTAL DOCUMENT

| Tumor | Control | Treated | Statistics |
|---|---|---|---|
| THC [μM] | 68 ± 35 | 47 ± 30 | $p < 0.01$ |
| $SO_2$ [%] | 74 ± 11 | 70 ± 9 | $p = 0.01$ |
| BFI [$10^{-8}cm^2s^{-1}$] | 3 ± 2 | 2 ± 1 | $p < 0.01$ |

| Shoulder | Control | Treated | Statistics |
|---|---|---|---|
| THC [μM] | 40 ± 8 | 40 ± 8 | $p = 0.87$ |
| $SO_2$ [%] | 54 ± 5 | 54 ± 6 | $p = 0.71$ |

**Table S1**.Mean values ± standard deviation for THC, $SO_2$ and BFI for the whole treatment period, in tumor and shoulder positions, for treated (n = 22) and control animals (n = 13).

| Group | log(THC) | log(SO2) | log(BFI) |
|---|---|---|---|
| Responder – non-responder | 0.17 | 0.21 | 0.01 (*) |
| Responder – control | 0.77 | 0.20 | 0.88 |
| Non-responder – control | 0.46 | 0.77 | 0.09 |

**Table S2**. Summary of pre-treatment tumor hemodynamics statistics (p values) among therapy outcomes. n = 13 controls, 8 non-responders, 14 responders.

| Univariate analysis | AUC | p | $p_{bs}$ |
|---|---|---|---|
| THC | 0.68 | 0.15 | □ 0.07 |
| $SO_2$ | 0.68 | 0.14 | □ 0.07 |
| BFI | 0.81 | 0.01 | ≤ 0.03 |

| Multivariate analysis | AUC | p | $p_{bs}$ |
|---|---|---|---|
| THC & BFI | 0.79 | 0.047 | ≤ 0.049 |
| THC & $SO_2$ | 0.67 | 0.320 | □ 0.190 |
| BFI & $SO_2$ | 0.79 | 0.052 | □ 0.050 |

**Table S3.** Pre-treatment therapy outcome classification by binomial logistic regression.

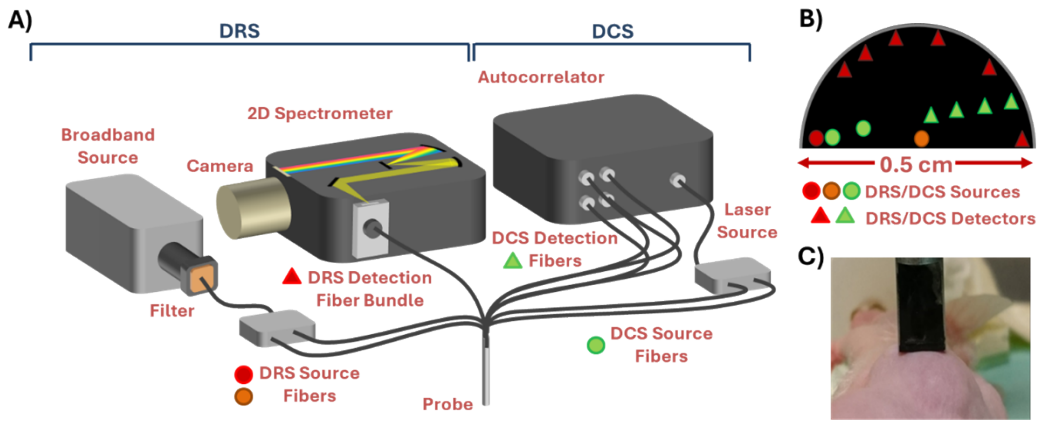


**Figure S1.** The hybrid DRS/DCS device. **A.** An illustration of the optical components of the hybrid DRS/DCS setup. **B.** A schematic of the tip of the contact hand-held probe composed of a set of fibers for light delivery (red/orange dots for DRS and green dots for DCS) and collection (red triangles for DRS and green triangles for DCS) into and from the tissue. **C.** A representative image of the probe placement on the tumor.

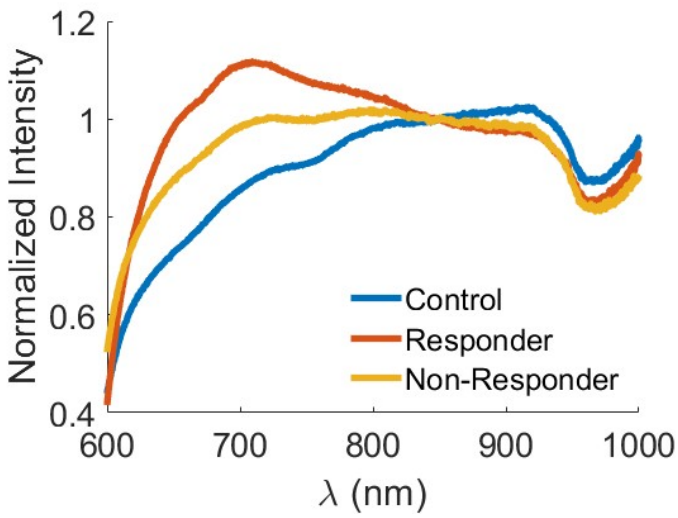


**Figure S2.** Example data of the calibrated optical measurements acquired at day 6 of treatment from the right-side of the tumor of a representative mouse in each of the therapy outcome groups (Control, Responder and Non-Responder) at 0.46 cm source-detector separation. Optical data was normalized at 850 nm for scaling purposes. Spectral shape differences reflect the complex interplay of the optical data due to heterogeneous tumor constituents.

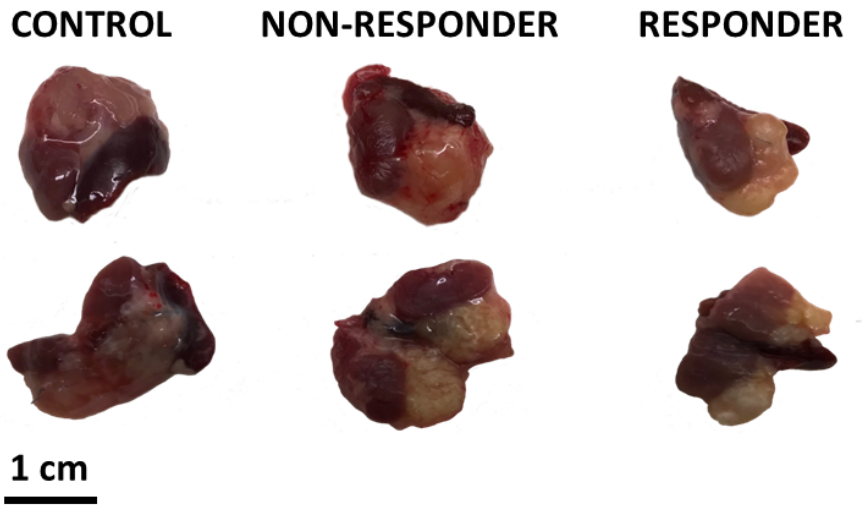


**Figure S3.** Representative images of control, responder and non-responder tumors at end point.

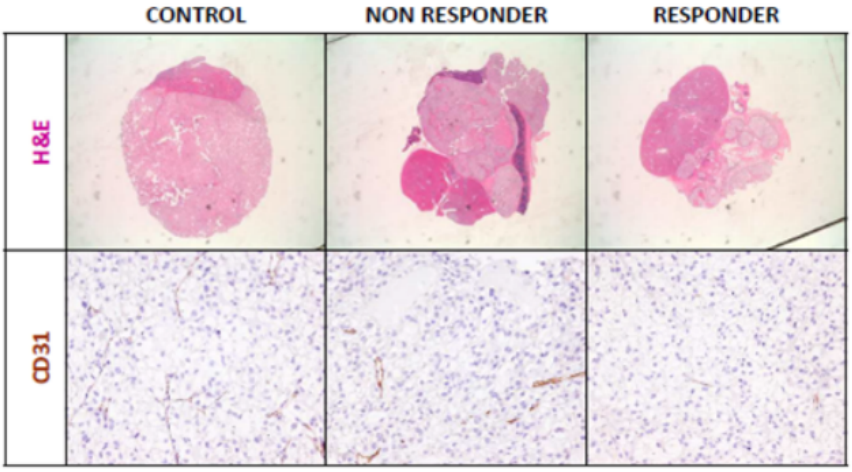


**Figure S4.** Representative images of hematoxylin and eosin stained tissue to quantify necrotic tumor areas (upper row) and immunohistological staining of CD31 to assess microvessel density (20x, bottom row).