A

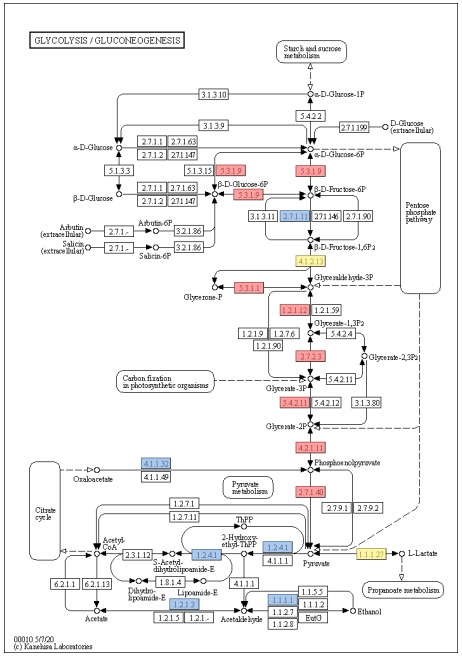
GLYCOLYSIS / GLUCONEOGENESIS
Starch and sucrose metabolism
Pentose phosphate pathway
Carbon fixation in photosynthetic organisms
Citrate cycle
Pyruvate metabolism
Propanoate metabolism
00010 5/7/20
(c) Kanehisa Laboratories

B

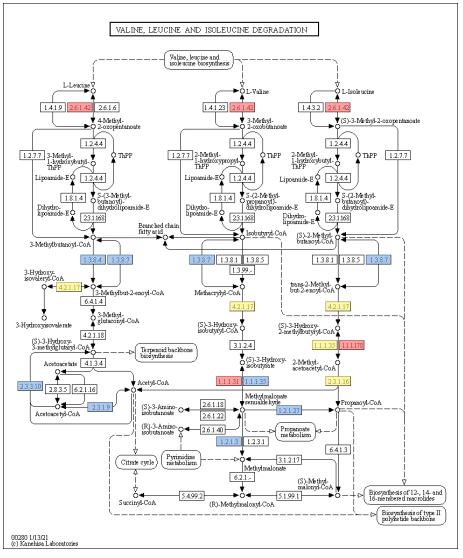
VALINE, LEUCINE AND ISOLEUCINE DEGRADATION
Valine, leucine and isoleucine biosynthesis
Citrate cycle
Propanoate metabolism
Biosynthesis of 12-, 14- and 16-membered macrolides
Biosynthesis of type II polyketide backbone
00280 1/13/21
(c) Kanehisa Laboratories

C

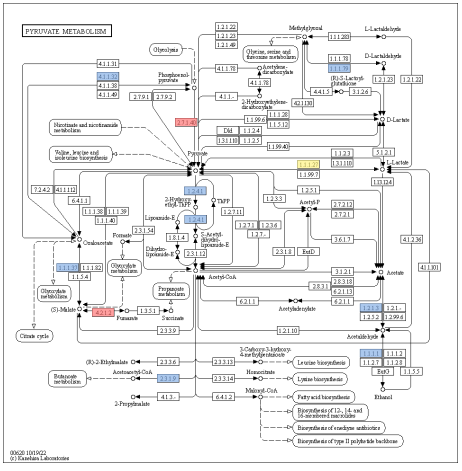
PYRUVATE METABOLISM
Citrate cycle
Propanoate metabolism
Butanoate metabolism
Leucine biosynthesis
Lysine biosynthesis
Fatty acid biosynthesis
Biosynthesis of 12-, 14- and 16-membered macrolides
Biosynthesis of enediyne antibiotics
Biosynthesis of type II polyketide backbone
00620 10/19/22
(c) Kanehisa Laboratories

D

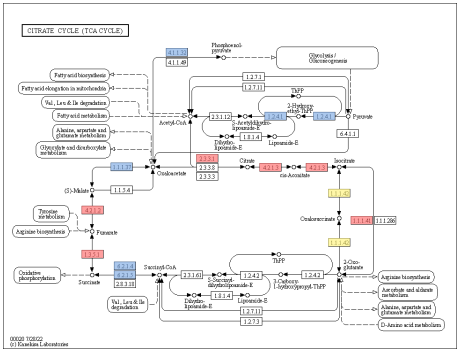
CITRATE CYCLE (TCA CYCLE)
Glycolysis / Gluconeogenesis
Pyruvate metabolism
Arginine biosynthesis
Oxidative phosphorylation
Arginine and proline metabolism
Alanine, aspartate and glutamate metabolism
D-Amino acid metabolism
00020 10/20/22
(c) Kanehisa Laboratories

E

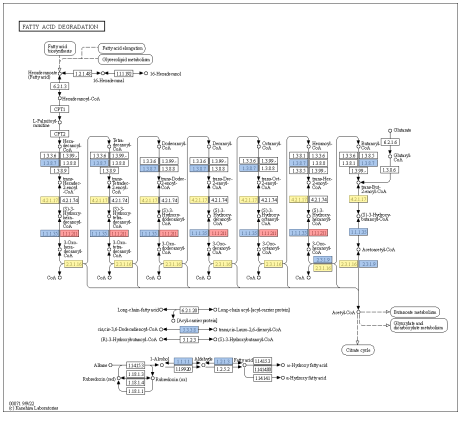
FATTY ACID DEGRADATION
Butanoate metabolism
Glycolysis and Gluconeogenesis
Citrate cycle
00071 10/6/22
(c) Kanehisa Laboratories