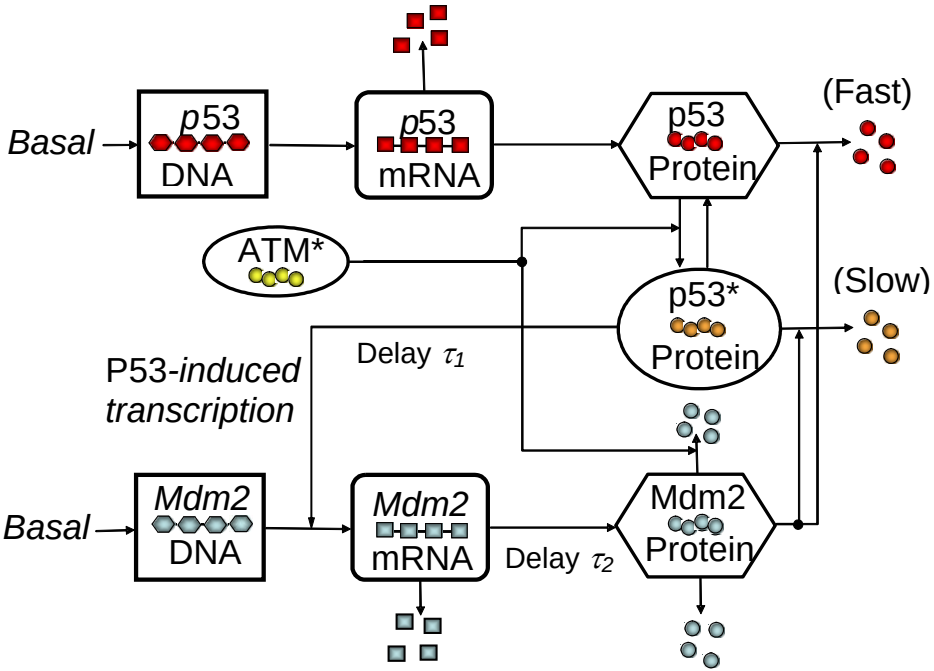
Basal
p53
DNA
p53
mRNA
p53
Protein
(Fast)
ATM*
p53*
Protein
(Slow)
Delay τ_1
P53-induced
transcription
Basal
Mdm2
DNA
Mdm2
mRNA
Delay τ_2
Mdm2
Protein