Figure S1

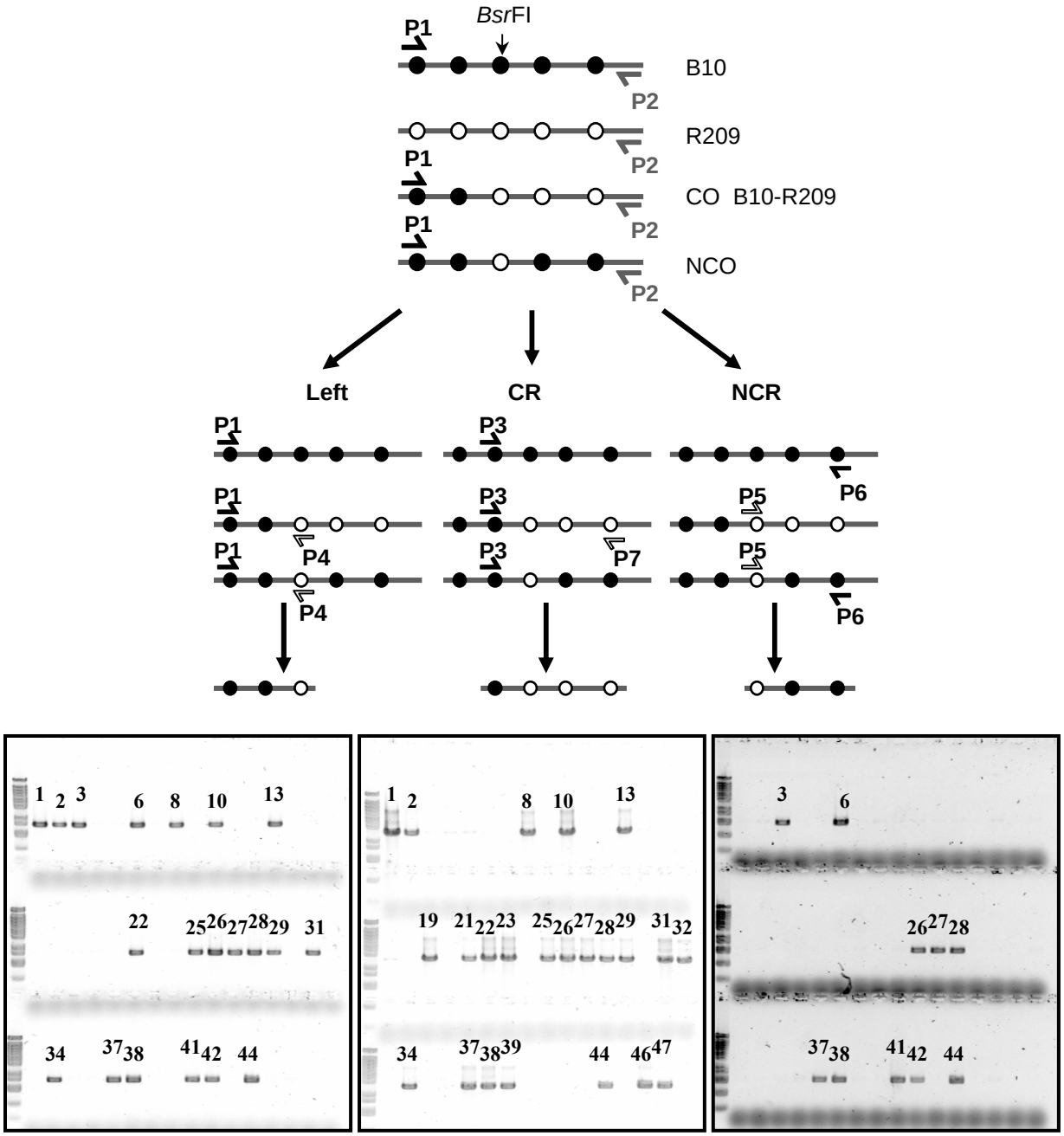

CO (left of BsrFI)
NCO

CO

NCO