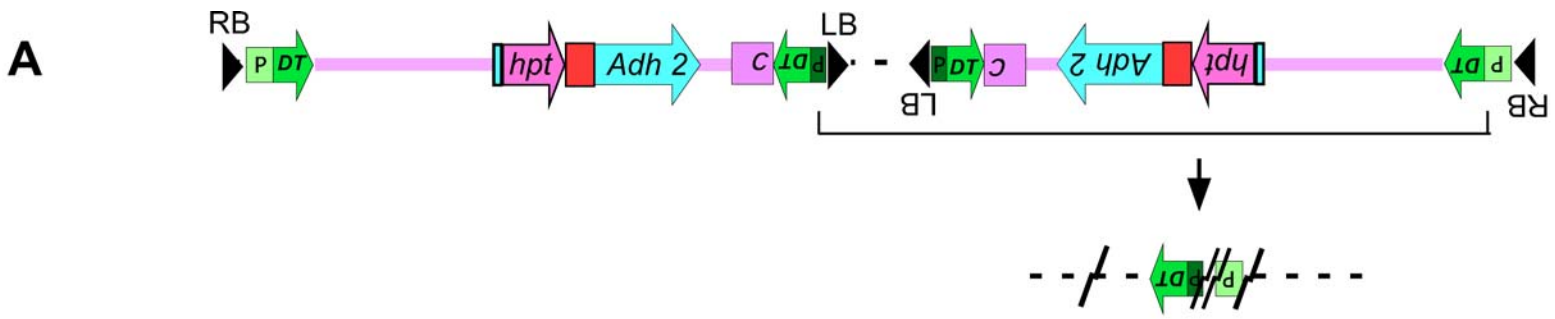

B

Hb-1

```
                                   L1238
                                     |
35S promoter     AAGGGTCTTGCGAAGGAT AGT gggattgtgcgtcatccct
 Recombinant     AAGGGTCTTGCGAAGGAT AGT TTTAGTTTTCTTAATTTAG
Ubiquitin promoter ataaaaaaactaaaatag AGT TTTAGTTTTCTTAATTTAG
                                     |
                                   R1021
```

Hb-2

```
                                   L1466
                                     |
35S promoter     AATAAAGTAATCAgATTAtC        agttaaagctatgtaatatt
 Recombinant     AATAAAGTAATCACATTAGC AAAAA CGTTAGACTCGTCGACGGCG
Ubiquitin promoter ctggttcgctggttggtgtc      CGTTAGACTCGTCGACGGCG
                                             |
                                            R1186
```

Hb-3

```
                                   L977
                                     |
35S promoter     ATCCGAGGAGGTTTCCGG AT attacccttttgttgaaaagt
 Recombinant     ATCCGAGGAGGTTTCCGG AT CATCAGGATCCATCTGCAGA
Ubiquitin promoter tttagaagaatcaacaac AT CATCAGGATCCATCTGCAGA
                                     |
                                   R2585
```

ental Fig. S1 Terada et al., Gene targeting by homologous recombination.