A

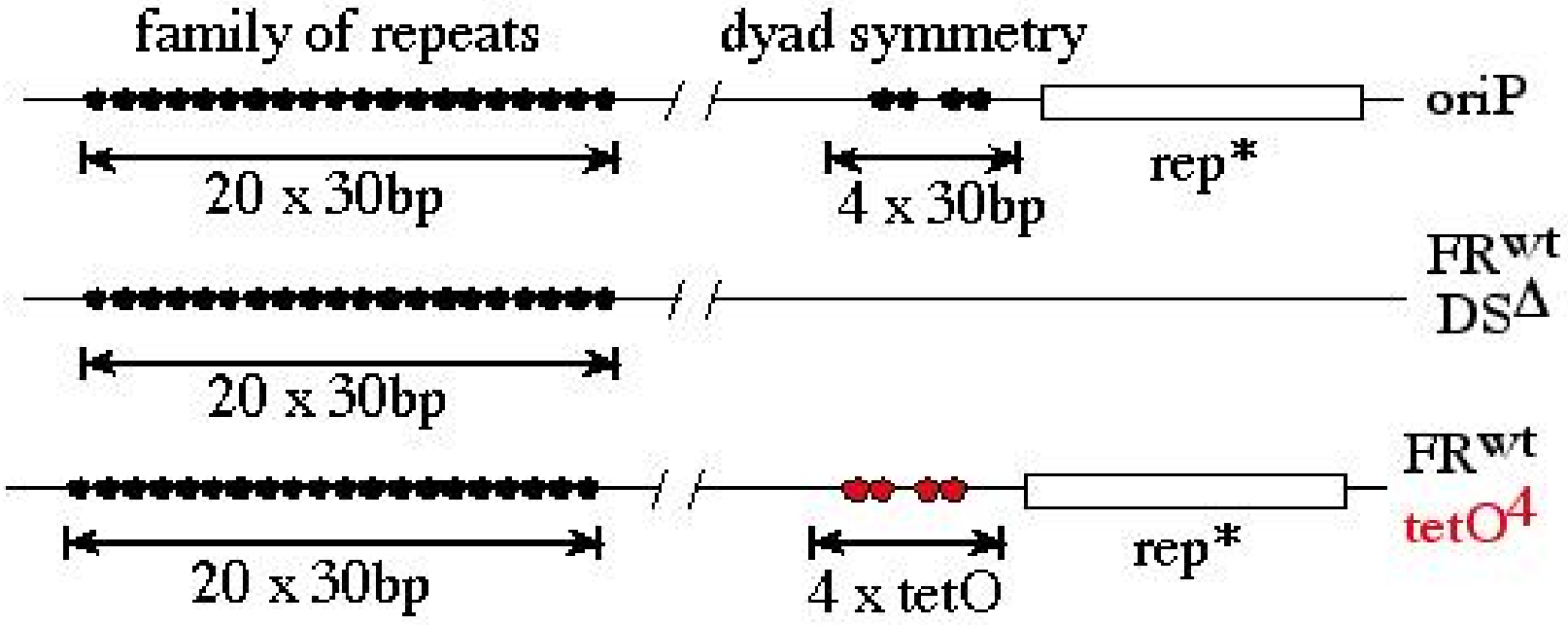
family of repeats
dyad symmetry
oriP
20 x 30bp
4 x 30bp
rep*
FR^wt DS^Δ
20 x 30bp
FR^wt tetO^4
20 x 30bp
4 x tetO
rep*

B

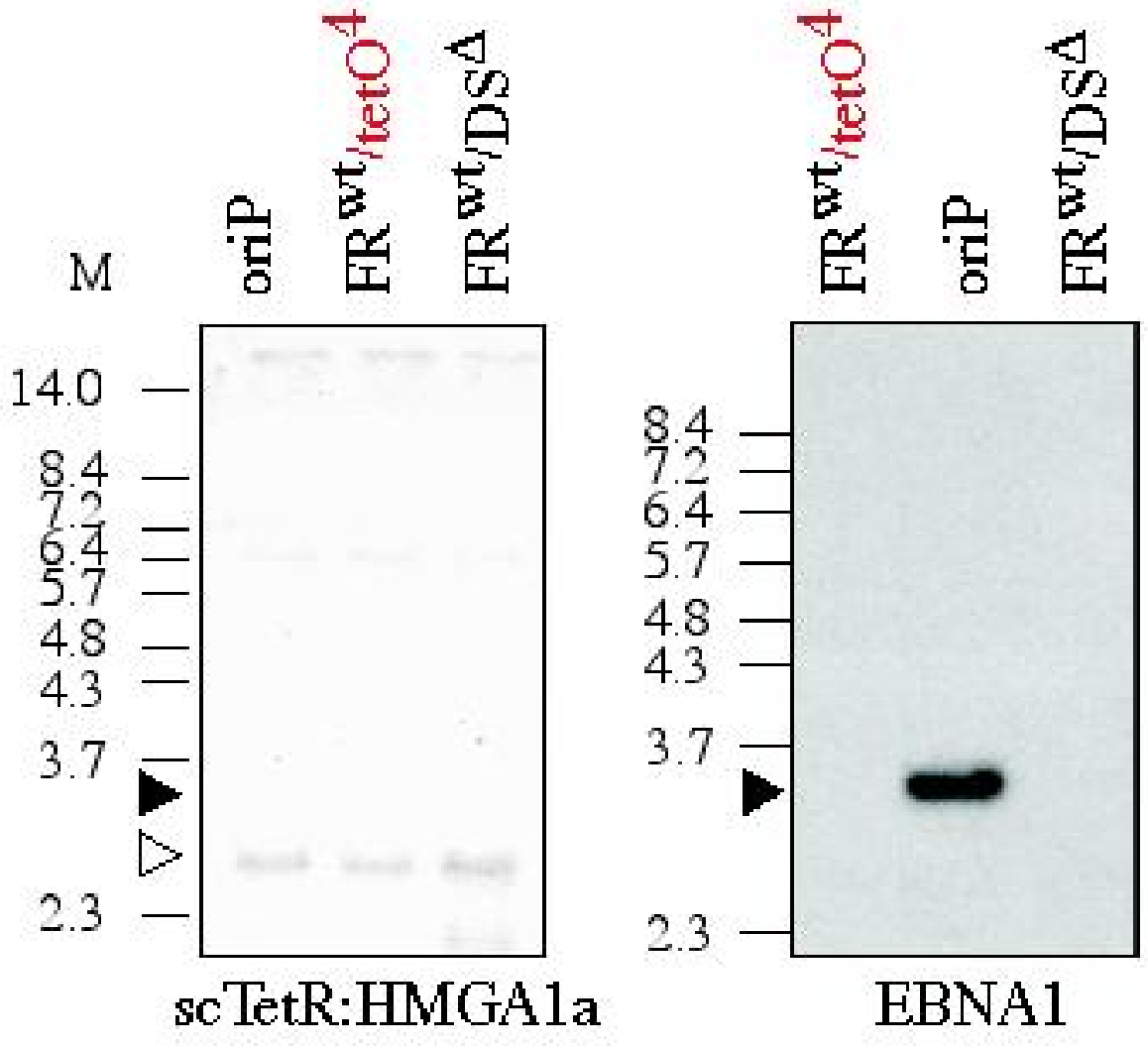
M
oriP
FR^wt/tetO^4
FR^wt/DS^Δ
14.0
8.4
7.2
6.4
5.7
4.8
4.3
3.7
2.3
scTetR:HMGA1a
FR^wt/tetO^4
oriP
FR^wt/DS^Δ
8.4
7.2
6.4
5.7
4.8
4.3
3.7
2.3
EBNA1