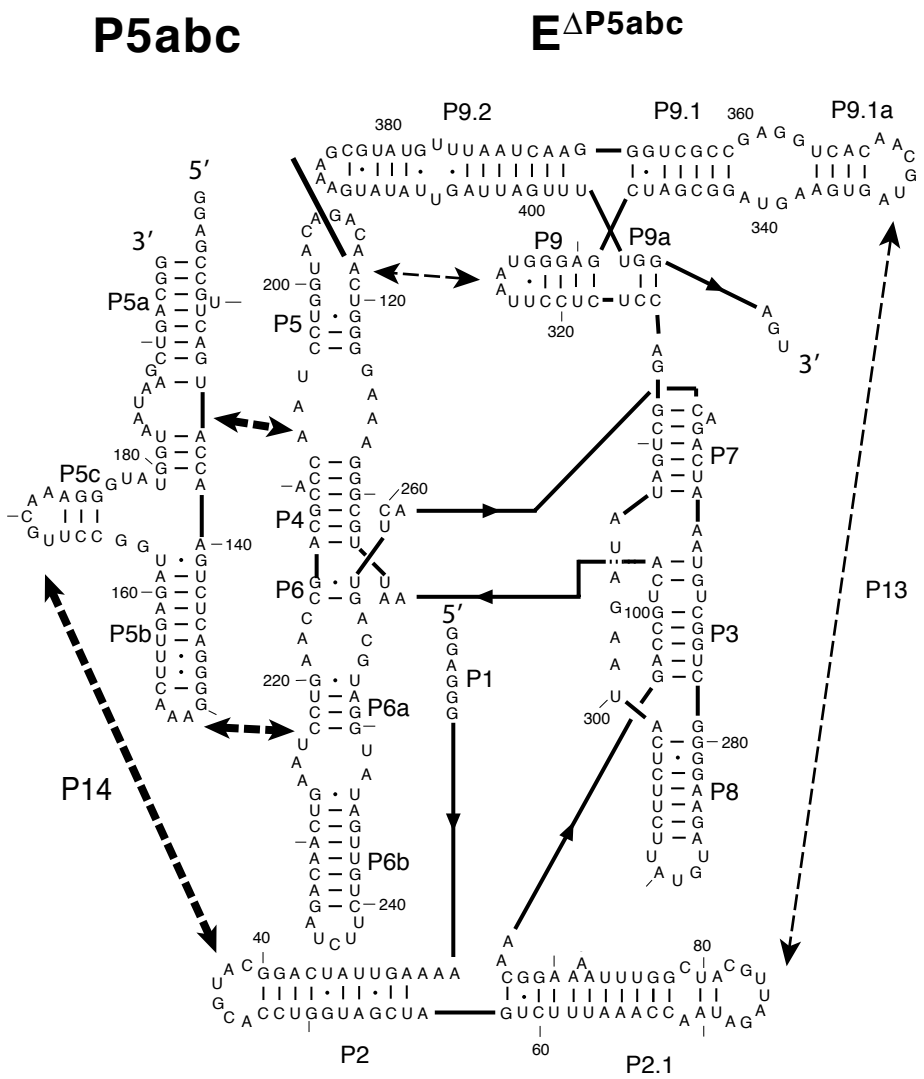

Fig. S3. Secondary structure of the $E^{\Delta P5abc}$ ribozyme and tertiary contacts of P5abc. P5abc forms three tertiary contacts, as indicated by dashed lines with arrows. These contacts are the P14 contact with L2, the tetraloop-receptor interaction between L5b and J6a/6b and the A-minor interactions of the A-rich bulge in P5a with J4/5. The other two long-range tertiary contacts of the ribozyme are indicated by thin dashed lines with arrows. The P5abc construct shown was used in experiments shown in Fig. 10B.