Figure S1

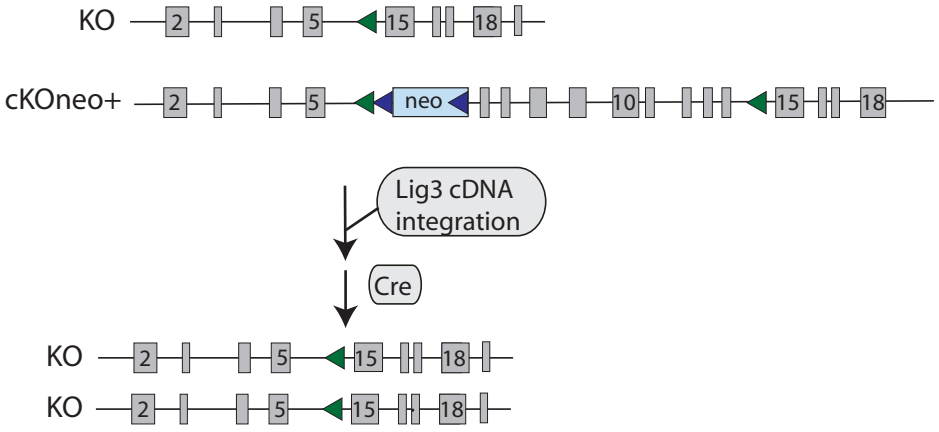
KO
2
5
15
18
cKOneo+
2
5
neo
10
15
18
Lig3 cDNA integration
Cre
KO
2
5
15
18
KO
2
5
15
18