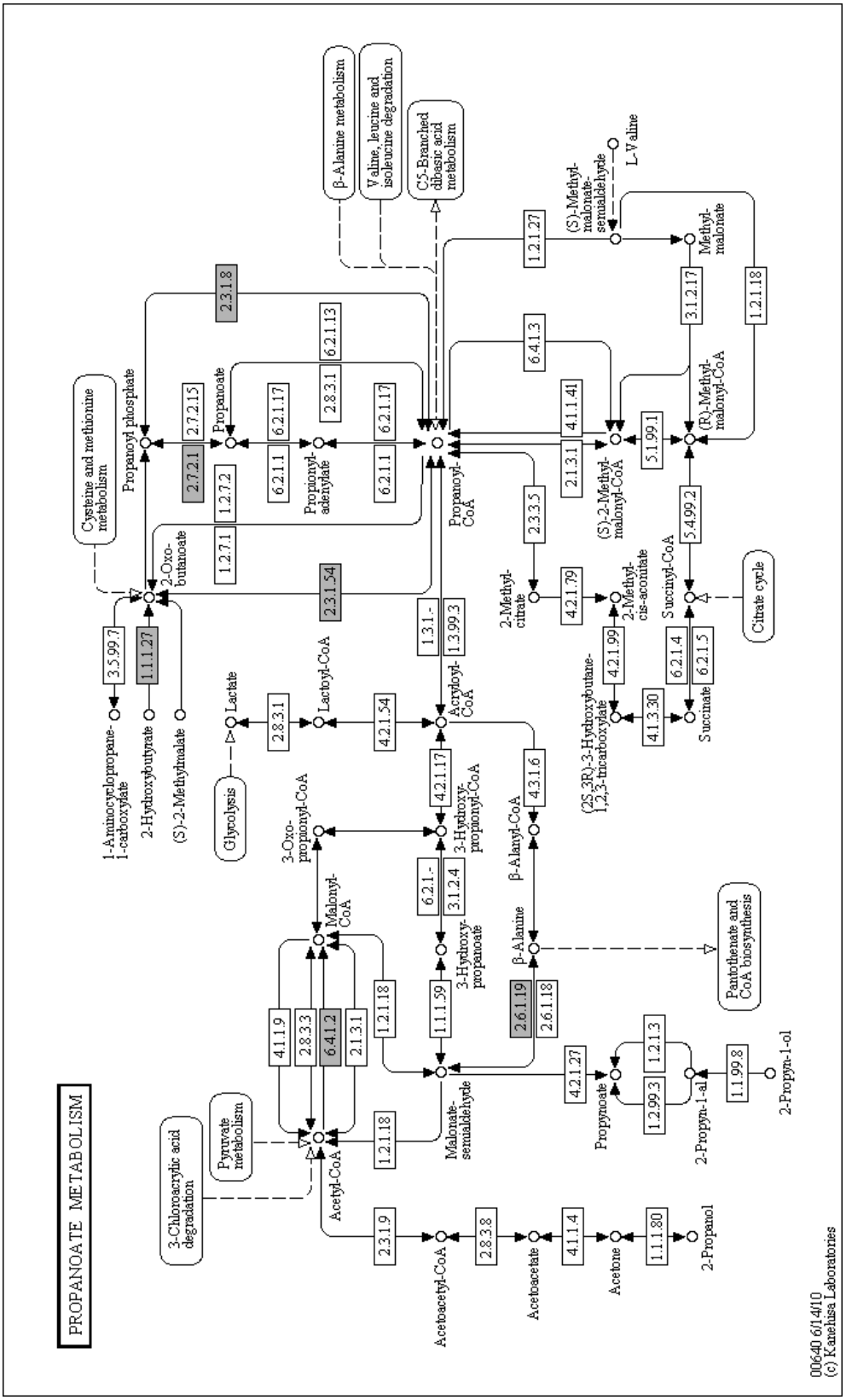

Figure 1: Propanoate metabolic map representing enzymes present in both *L. ruminis* ATCC 25644 and ATCC 27782. Grey boxes, enzymes present in both sequenced strains