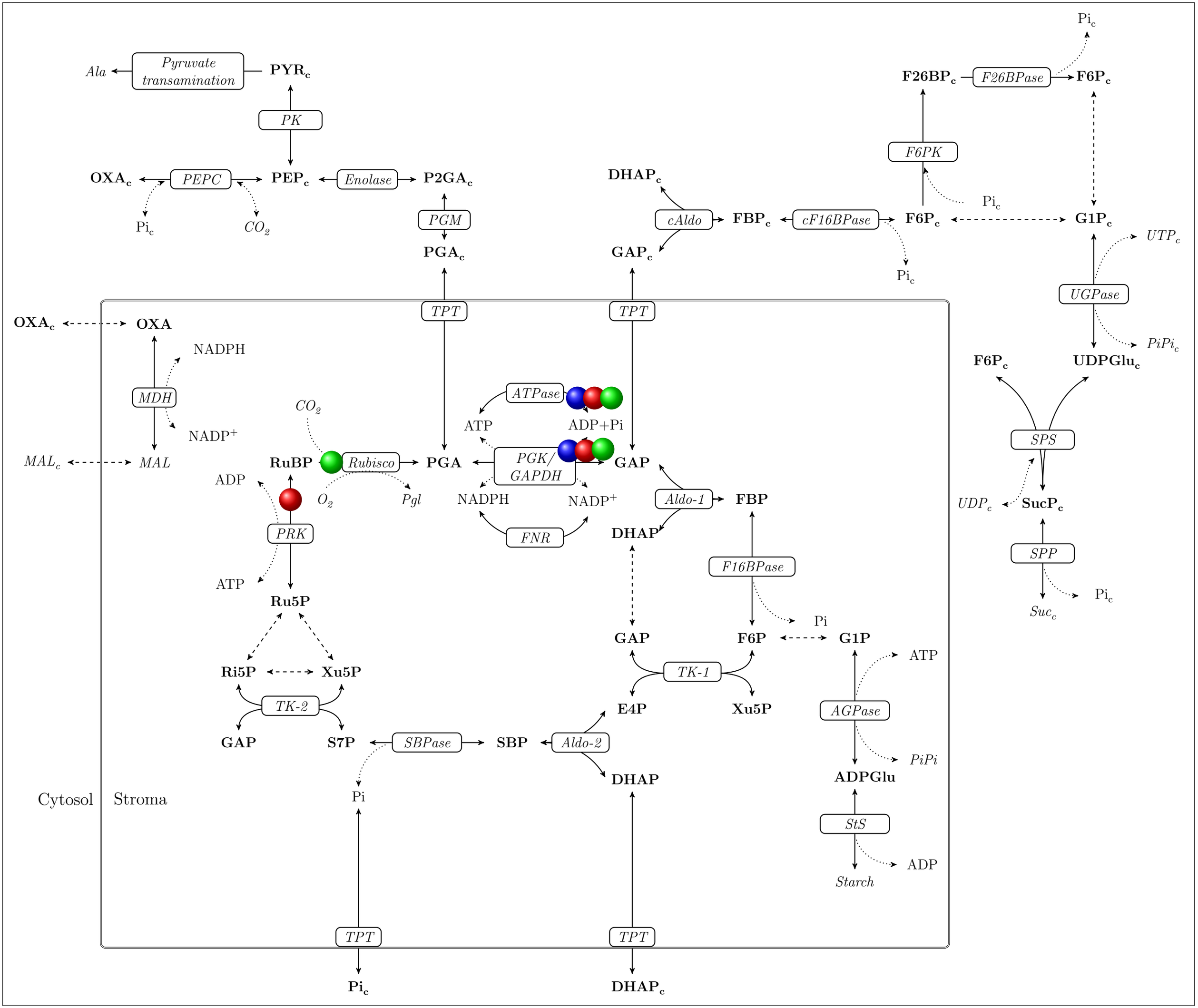
Ala
Pyruvate transamination
PYR$_c$
PK
OXA$_c$
PEPC
PEP$_c$
Enolase
P2GA$_c$
Pi$_c$
CO_2
PGM
PGA$_c$
DHAP$_c$
cAldo
FBP$_c$
cF16BPase
F6P$_c$
GAP$_c$
Pi$_c$
F26BP$_c$
F26BPase
F6P$_c$
Pi$_c$
F6PK
Pi$_c$
G1P$_c$
UTP$_c$
UGPase
PiPi$_c$
UDPGlu$_c$
F6P$_c$
SPS
UDP$_c$
SucP$_c$
SPP
Pi$_c$
Suc$_c$
OXA$_c$
OXA
NADPH
MDH
NADP$^+$
MAL$_c$
MAL
TPT
TPT
CO_2
RuBP
Rubisco
PGA
ATPase
ATP
ADP+Pi
PGK/ GAPDH
GAP
ADP
O_2
Pgl
NADPH
NADP$^+$
FNR
Aldo-1
FBP
DHAP
PRK
ATP
Ru5P
F16BPase
Pi
GAP
F6P
G1P
Ri5P
Xu5P
TK-1
ATP
TK-2
E4P
Xu5P
AGPase
GAP
S7P
SBPase
SBP
Aldo-2
PiPi
DHAP
ADPGlu
Cytosol
Stroma
Pi
StS
ADP
Starch
TPT
TPT
Pi$_c$
DHAP$_c$