McIntyre et al., Supp Fig. 1

A

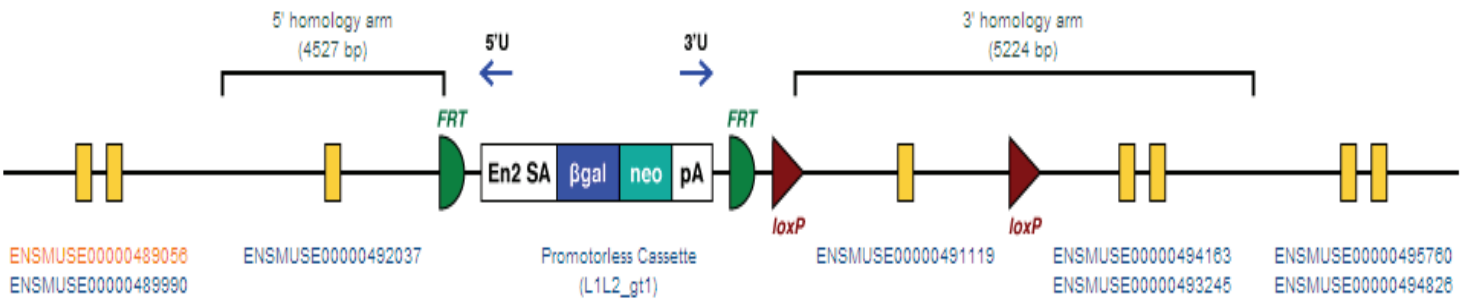

B

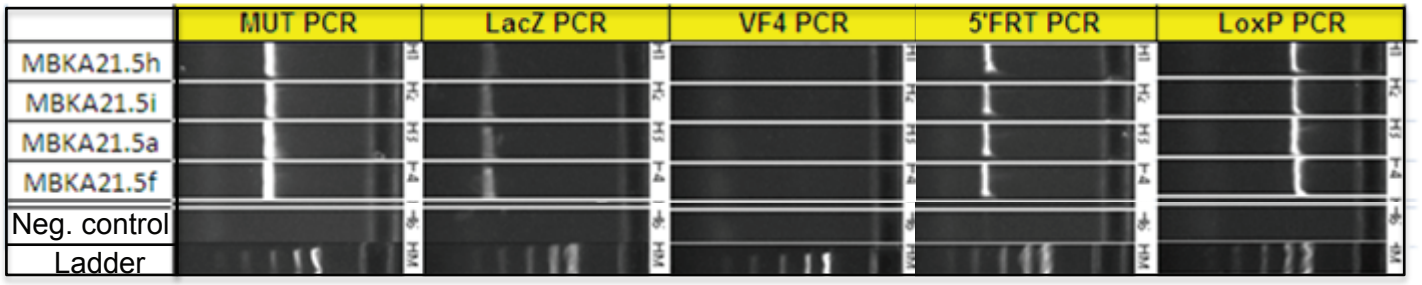

C

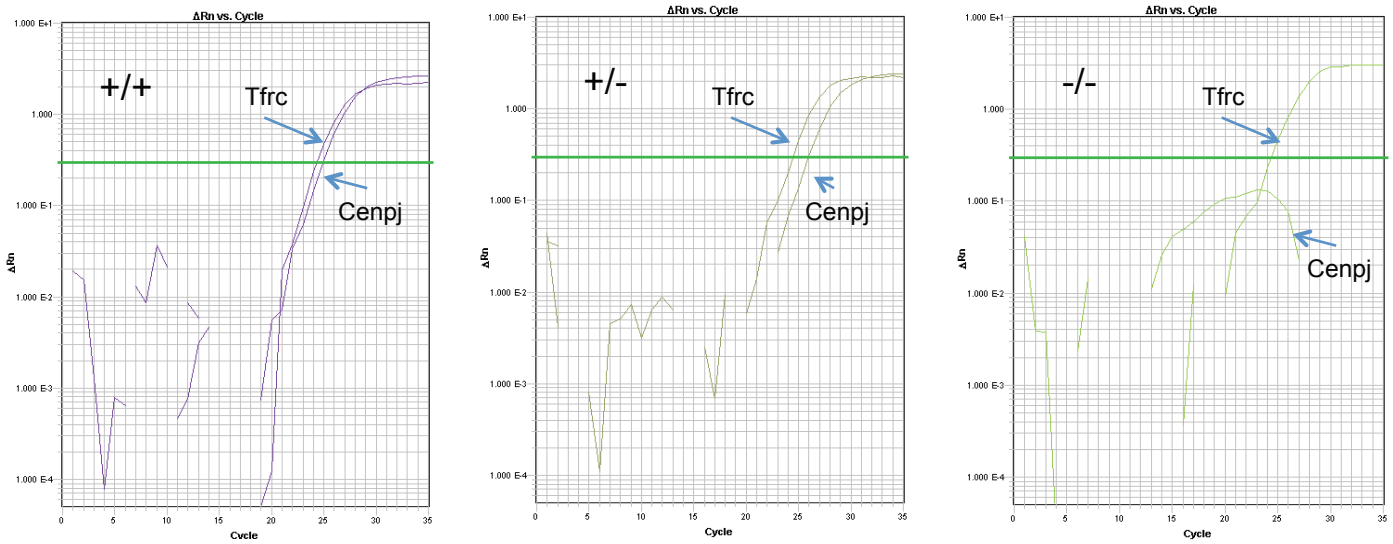

MBKA60.3c WT (used as calibrator).
Cenpj and Tfrc endogenous control Ct ~ 1 cycle apart

MBKA69.1c heterozygote.
Cenpj and Tfrc endogenous control Ct ~ 2 cycles apart

MBKA69.1e homozygote.
No amplification of Cenpj assay above the Ct detection threshold

D

PCR	F PRIMER	R PRIMER
Vector Backbone (VF4) PCR	GTAGCTGACATTCATCCGGG	CTTTTCTACGGGGTCTGACG
Cenpj WT PCR	TCAAGCTATTTTGGCTCCACAG	TTGATGATTCCCAGCACCAC
Cenpj Mut PCR	TCAAGCTATTTTGGCTCCACAG	TCGTGGTATCGTTATGCGCC
LacZ PCR	ATCACGACGCGCTGTATC	ACATCGGGCAAATAATATCG
5' FRT PCR	AGGCGCATAACGATACCACGAT	CCACAACGGGTTCTTCTGTT
LoxP PCR	ATCCGGGGGTACCGCGTCGAG	ACTGATGGCGAGCTCAGACC
WT LoA qPCR	GCAGAAGGTGTCCAGTACAATGT	GCAAGAGACTGTGGTTGGAAGTAAG