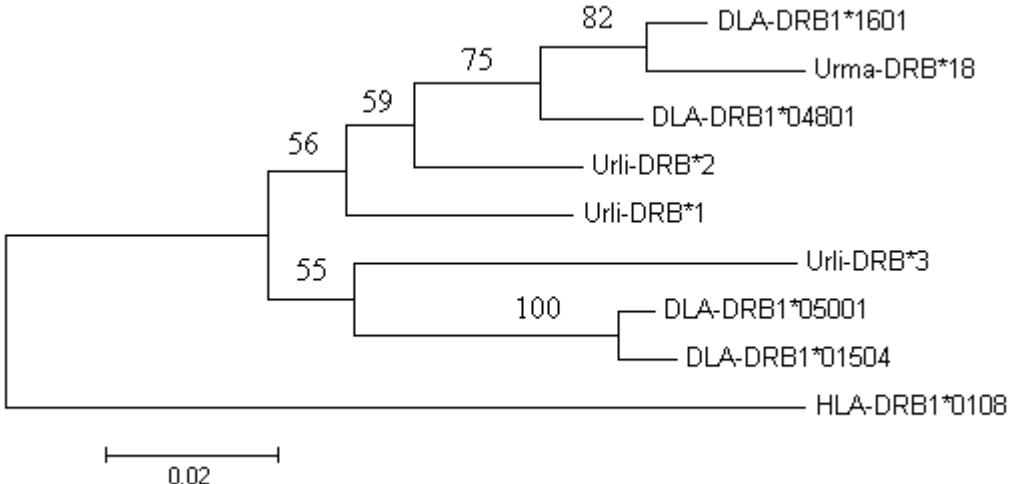
82
75
59
56
55
100
DLA-DRB1*1601
Urma-DRB*18
DLA-DRB1*04801
Urli-DRB*2
Urli-DRB*1
Urli-DRB*3
DLA-DRB1*05001
DLA-DRB1*01504
HLA-DRB1*0108
0.02