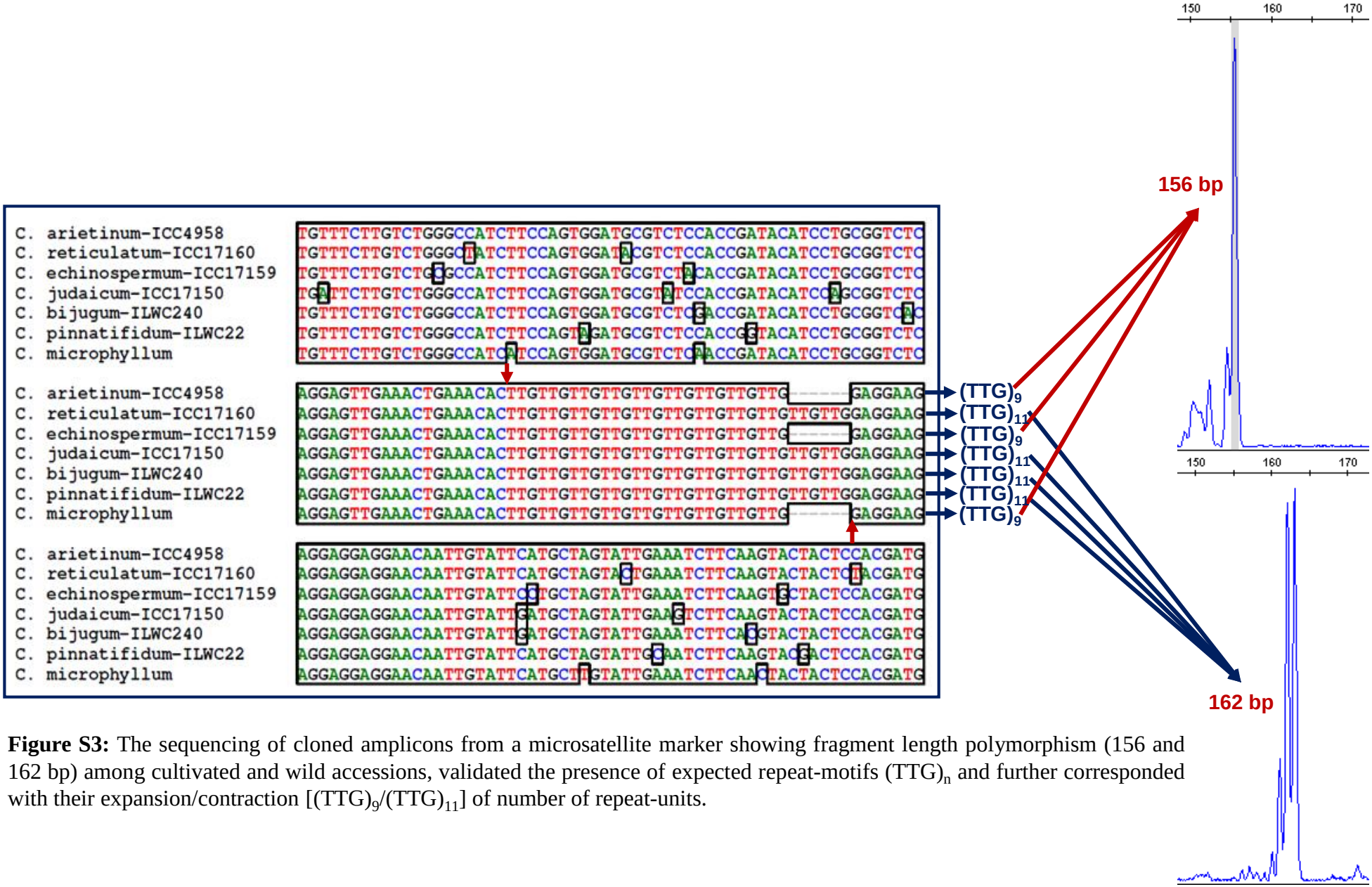

Figure S3: The sequencing of cloned amplicons from a microsatellite marker showing fragment length polymorphism (156 and 162 bp) among cultivated and wild accessions, validated the presence of expected repeat-motifs $(TTG)_n$ and further corresponded with their expansion/contraction $[(TTG)_9/(TTG)_{11}]$ of number of repeat-units.