Characterization of Top2 mutant

A

B

Paternal \ Maternal	*Top2*$^{17\text{-}1}$	*Top2*$^{17\text{-}3}$
Top2$^{17\text{-}1}$	-	M = Fertile F = Sterile
Top2$^{17\text{-}3}$	M = Fertile F = Sterile	-

C

D Enhancer *in trans* mode of transvection

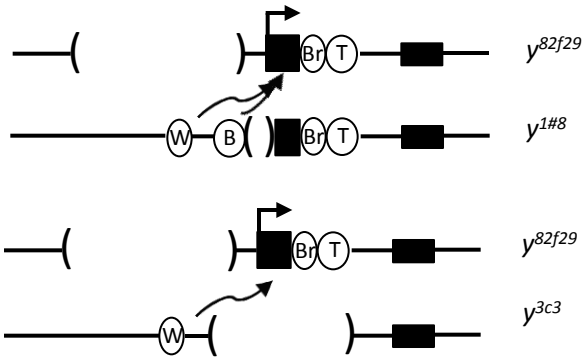

E

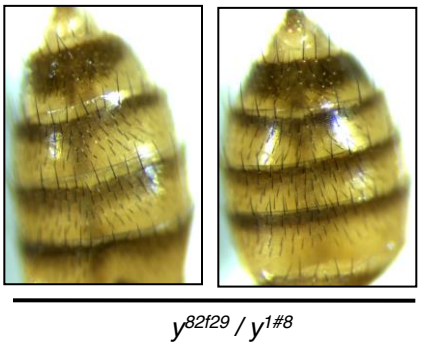

F

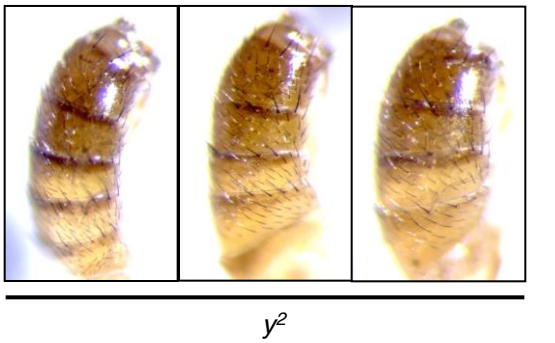

Genotype	Wing pigmentation	Body pigmentation
y^{82f29}/y^{82f29}	1	1.5
$y^{1\#8}/y^{1\#8}$	1	1
y^{3c3}/y^{3c3}	1	1
$y^{82f29}/y^{1\#8}$	3	3
y^{82f29}/y^{3c3}	3	1
$y^{82f29}/y^{1\#8}$; *top2*^{m}/*CyO*	3	3
y^{82f29}/y^{3c3}; *top2*$^{17\text{-}1}$/*top2*$^{17\text{-}3}$	3	3
y^{82f29}/y^{3c3}; *top2*^{m}/*CyO*	3	1
y^{82f29}/y^{3c3}; *top2*$^{17\text{-}1}$/*top2*$^{17\text{-}3}$	3	1