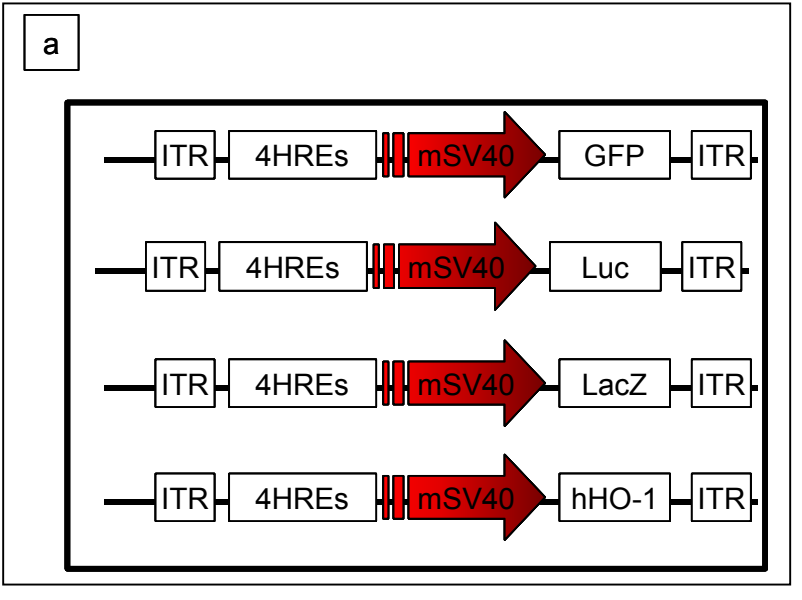
a
ITR
4HREs
mSV40
GFP
ITR
ITR
4HREs
mSV40
Luc
ITR
ITR
4HREs
mSV40
LacZ
ITR
ITR
4HREs
mSV40
hHO-1
ITR