Figure S2

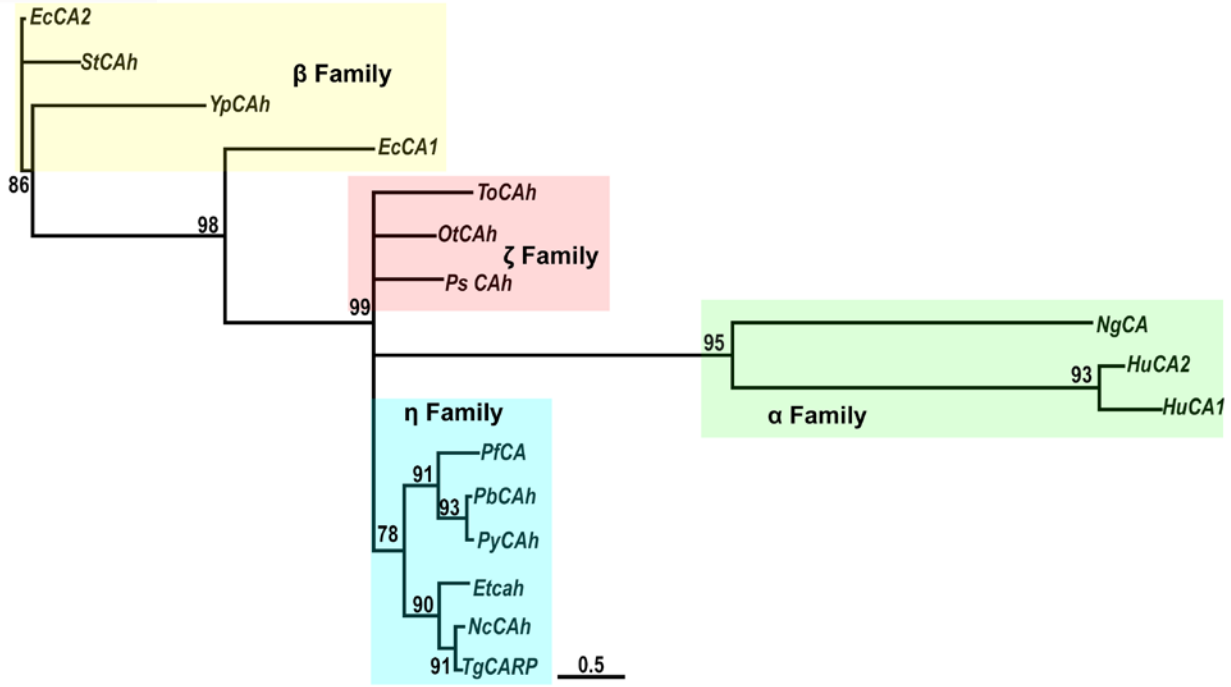
EcCA2
StCAh
YpCAh
EcCA1
β Family
86
98
ToCAh
OtCAh
Ps CAh
ζ Family
99
95
NgCA
93
HuCA2
HuCA1
α Family
η Family
PfCA
91
93
PbCAh
PyCAh
78
Etcah
90
NcCAh
91
TgCARP
0.5