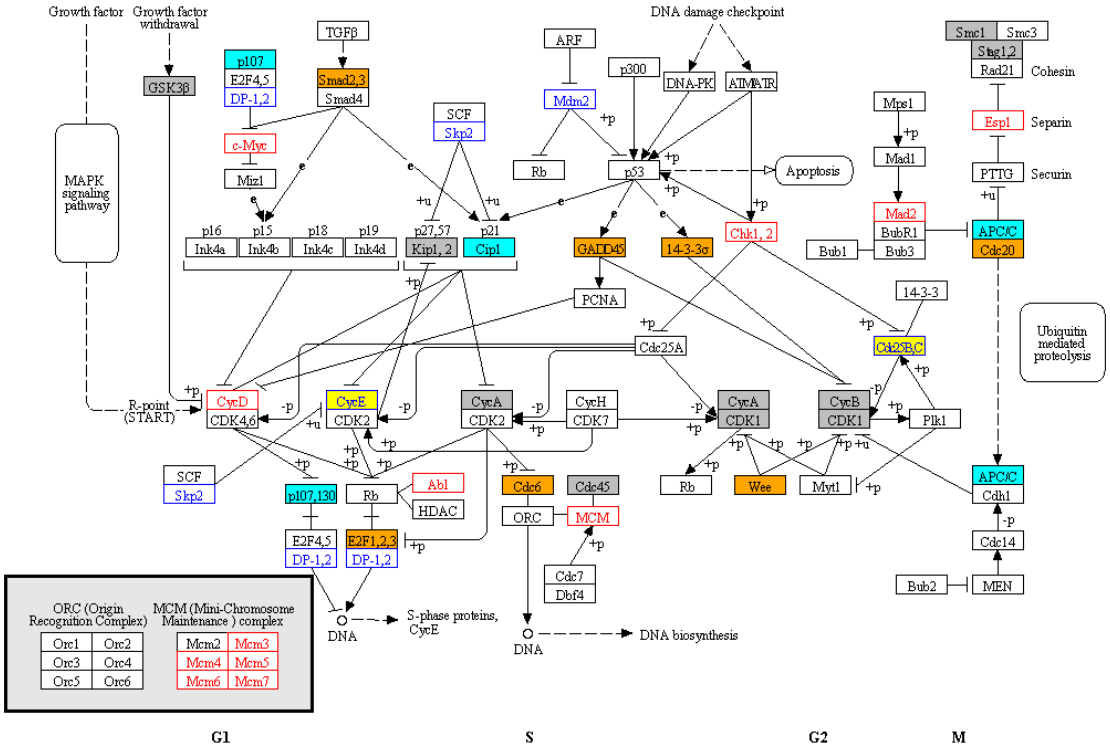

A. CDCA (4h)

B. FXR (4h)

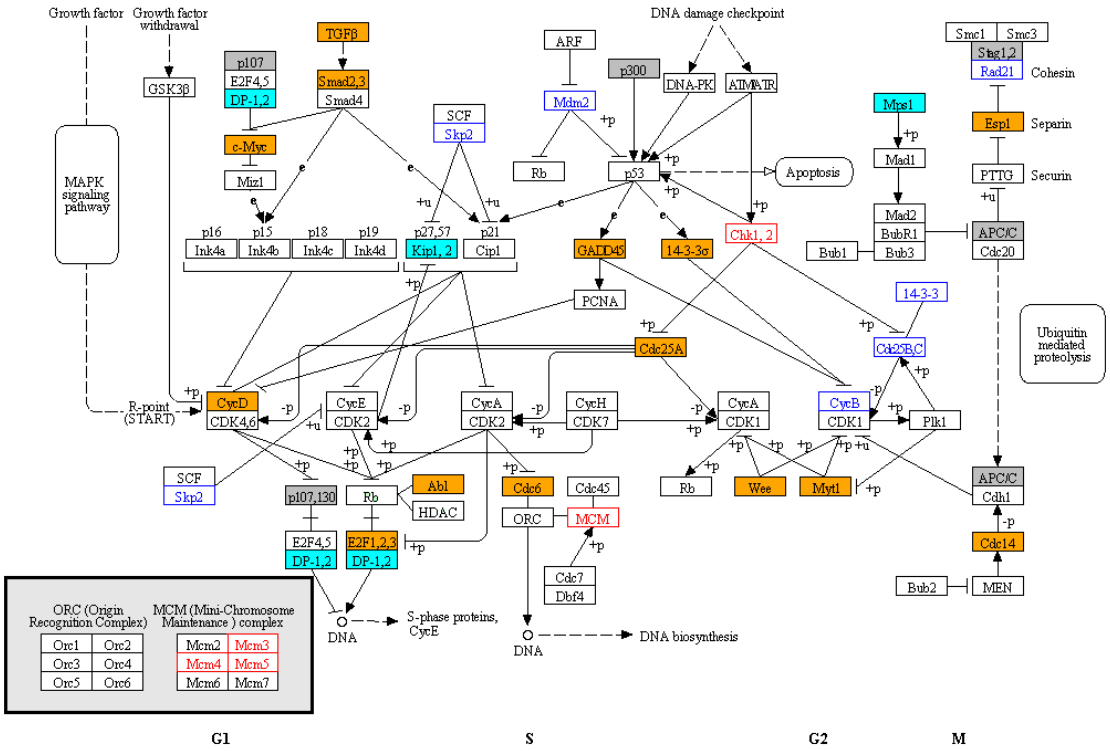

S4 Fig. Effect of the FXR-L and CDCA treatments on the KEGG cell cycle pathway at 4h. **(A)** The genes in the leading edge for CDCA treatment at 4h are highlighted in blue for down-regulations and orange for up-regulations. **(B)** Same image for the FXR-L treatment at 4h.