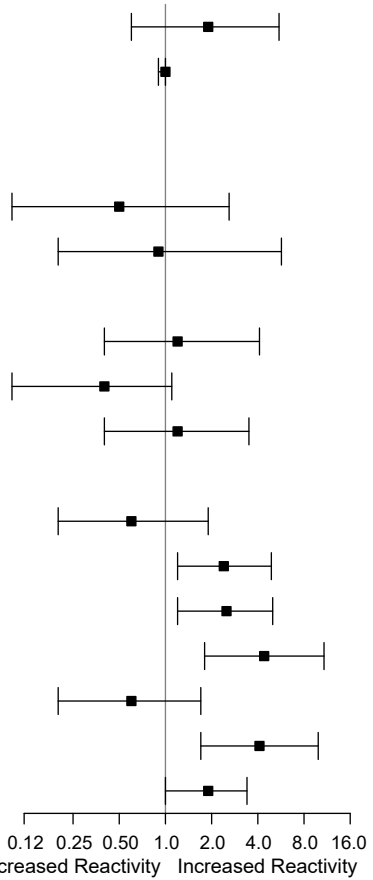	Hyporeactive (n=21)	Reactive (n=41)	Odds Ratio [95% CI]	p-value
Demographics				
Female	9 (43%)	24 (58%)	1.9 [0.6, 5.5]	0.244
Age (years)	17.0 (13.0, 26.0)	17.0 (10.0, 24.0)	1 [0.9, 1]	0.784
Race				
White	16 (76%)	34 (83%)	*	
Asian	3 (14%)	3 (7%)	0.5 [0.1, 2.6]	0.387
Other	2 (10%)	4 (10%)	0.9 [0.2, 5.7]	0.947
Allergic comorbidities				
Asthma	15 (71%)	31 (76%)	1.2 [0.4, 4.1]	0.722
Atopic Dermatitis	14 (67%)	17 (42%)	0.4 [0.1, 1.1]	0.064
Environmental allergies	13 (62%)	27 (66%)	1.2 [0.4, 3.5]	0.759
Serology and Skin Testing				
Total IgE (kU/L)	349.0 (188.0, 516.0)	232.0 (141.0, 513.0)	0.6 [0.2, 1.9]	0.394
Peanut-specific IgE (kU/L)	7.2 (3.3, 74.2)	61.3 (20.9, 145.0)	2.4 [1.2, 4.9]	0.014
Ara h 2-specific IgE (kU/L)	2.8 (1.3, 51.4)	36.3 (9.2, 79.3)	2.5 [1.2, 5]	0.011
Peanut IgE : Total IgE Ratio	0.02 (0.01, 0.17)	0.24 (0.11, 0.35)	4.4 [1.8, 10.8]	0.002
Peanut-specific IgG4 (μg/mL)	0.42 (0.19, 1.25)	0.43 (0.21, 0.68)	0.6 [0.2, 1.7]	0.310
Peanut IgE : Peanut IgG4 Ratio	17.2 (5.2, 121.7)	130.6 (50.7, 252.4)	4.1 [1.7, 9.9]	0.001
Peanut-specific skin test (mm)	12.0 (6.0, 13.0)	12.0 (9.5, 14.5)	1.9 [1, 3.4]	0.047