Figure S4

A

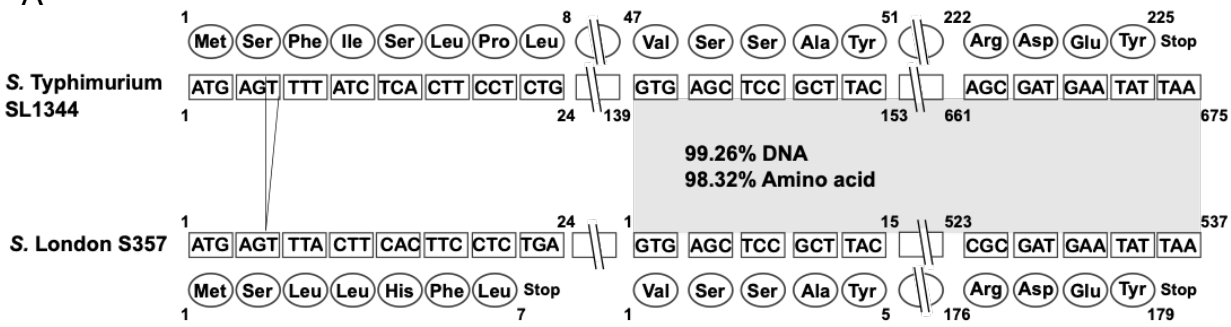

B

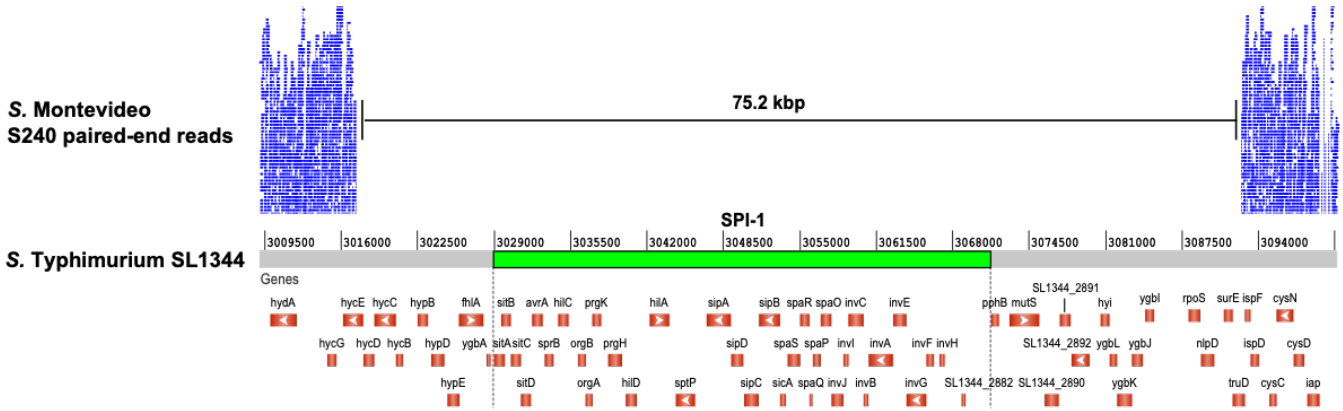
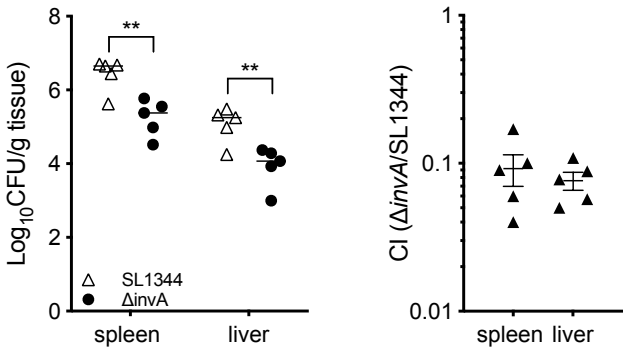
C